GB

Dual fuel light oil/gas burners

Modulating operation

CE

CODE	MODEL	TYPE
20087647 - 20087648 20087651	RLS 310/M MX	1161T
20076483 20087649 - 20087650	RLS 410/M MX	1162T
20087652	RLS 510/M MX	1163T
20087653	RLS 610/M MX	1164T

20084880 (3) - 09/2015

Original instructions

1 Declarations ... 3

2 Information and general warnings ... 4

2.1 Information about the instruction manual ... 4
2.1.1 Introduction ... 4
2.1.2 General dangers ... 4
2.1.3 Other symbols ... 4
2.1.4 Delivery of the system and the instruction manual ... 5
2.2 Guarantee and responsibility ... 5

3 Safety and prevention ... 6

3.1 Introduction ... 6
3.2 Personnel training ... 6

4 Technical description of the burner ... 7

4.1 Burner designation ... 7
4.2 Models available ... 8
4.3 Burner categories - Countries of destination ... 8
4.4 Technical data ... 9
4.5 Electrical data ... 10
4.6 Burner weight ... 11
4.7 Maximum dimensions ... 11
4.8 Firing rates ... 12
4.9 Test boiler ... 13
4.10 Burner equipment ... 13
4.11 Burner description ... 14
4.12 Electrical panel description ... 15
4.13 Control box LFL ... 16
4.14 Servomotor SQM40 ... 17
4.15 Calibration of the thermal relay ... 17

5 Installation ... 18

5.1 Notes on safety for the installation ... 18
5.2 Handling ... 18
5.3 Preliminary checks ... 18
5.4 Operating position ... 19
5.5 Preparing the boiler ... 19
5.5.1 Boring the boiler plate ... 19
5.5.2 Blast tube length ... 19
5.6 Securing the burner to the boiler ... 19
5.7 Access to head internal part ... 20
5.8 Position of the electrodes and central gas nozzles ... 20
5.9 Gas butterfly valve ... 21
5.10 Combustion head adjustment ... 21
5.11 Nozzle installation ... 22
5.11.1 Recommended nozzle ... 22
5.12 Light oil supply ... 23
5.12.1 Double-pipe circuit ... 23
5.12.2 The loop circuit ... 23
5.12.3 Hydraulic connections ... 23
5.12.4 Hydraulic circuit diagram ... 24
5.12.5 Priming pump ... 24
5.13 Gas feeding ... 25
5.13.1 Gas feeding line ... 25
5.13.2 Gas train ... 26
5.13.3 Gas train installation ... 26
5.13.4 Gas pressure ... 27

5.14 Electrical wiring 28
5.14.1 Supply cables and external connections passage 28

6 Start-up, calibration and operation of the burner 29
6.1 Notes on safety for the first start-up 29
6.2 Servomotor adjustment 29
6.3 Adjustments prior to ignition (light oil) 29
6.3.1 Nozzle 29
6.3.2 Combustion head 29
6.3.3 Pump pressure 29
6.3.4 Fan damper 29
6.4 Burner start-up (light oil) 30
6.5 Burner ignition (light oil) 30
6.6 Pressure variator 31
6.6.1 Light oil burner calibration procedure 32
6.6.2 Maximum output (light oil) 32
6.6.3 Minimum output (light oil) 32
6.6.4 Intermediate outputs 32
6.7 Change of fuel 32
6.8 Adjustments prior to ignition (gas) 33
6.9 Burner ignition (gas) 33
6.10 Proceed with the calibration (gas) 34
6.10.1 Burner adjustment 34
6.10.2 Output upon ignition 34
6.10.3 Maximum output 34
6.10.4 Minimum output 35
6.10.5 Intermediate outputs 36
6.11 Pressure switch adjustment 37
6.11.1 Air pressure switch - check CO 37
6.11.2 Maximum gas pressure switch 37
6.11.3 Minimum gas pressure switch 37
6.11.4 Minimum oil pressure switch 37
6.11.5 Maximum oil pressure switch 37
6.12 Operation sequence of the burner (gas) 38
6.12.1 Burner start-up 38
6.12.2 Operation 38
6.12.3 Burner flame goes out during operation 38
6.12.4 Ignition failure 38
6.12.5 Control box reset 38
6.13 Operation sequence of the burner (light oil) 39
6.13.1 Burner start-up 39
6.13.2 Operation 39
6.13.3 Burner flame goes out during operation 39
6.13.4 Ignition failure 39
6.13.5 Control box reset 39
6.14 Final checks (with burner operating) 40

7 Maintenance 41
7.1 Notes on safety for the maintenance 41
7.2 Maintenance programme 41
7.2.1 Maintenance frequency 41
7.2.2 Checking and cleaning 41
7.3 Opening the burner 43
7.4 Closing the burner 43

8 Faults - Possible causes - Solutions 44

A Appendix - Accessories 50

B Appendix - Electrical panel layout 51

1 Declarations

Declaration of Conformity in accordance with ISO / IEC 17050-1		
Manufacturer:	RIELLO S.p.A.	
Address:	Via Pilade Riello, 7 37045 Legnago (VR)	
Product:	Forced draught gas burners	
Model and type:	RLS 310/M MX RLS 410/M MX RLS 510/M MX RLS 610/M MX	1161T 1162T 1163T 1164T
These products are in compliance with the following Technical Standards:		
EN 676		
EN 12100		
and according to the European Directives:		
GAD	2009/142/EC	Gas Devices Directive
MD	2006/42/EC	Machine Directive
LVD	2006/95/EC	Low Voltage Directive
EMC	2004/108/EC	Electromagnetic Compatibility
The products are marked as follows:		
CE 0085CQ0196	RLS 310/M MX (Class 2 EN 267 - Class 3 EN676) RLS 410/M MX (Class 2 EN 267 - Class 3 EN676) RLS 510/M MX (Class 2 EN 267 - Class 3 EN676) RLS 610/M MX (Class 2 EN 267 - Class 3 EN676)	

The quality is guaranteed by a quality and management system certified in accordance with UNI EN ISO 9001.

Manufacturer's Declaration			
RIELLO S.p.A. declares that the following products comply with the NOx emission limits specified by German standard "**1. BImSchV revision 26.01.2010**".			
Product	Model	Type	Output
Forced draught gas burners	RLS 310/M MX RLS 410/M MX RLS 510/M MX RLS 610/M MX	1161T 1162T 1163T 1164T	600 - 3600 kW 640 - 4200 kW 660 - 5170 kW 1000 - 6155 kW

Legnago, 21.05.2015

Executive General Manager
RIELLO S.p.A. - Burner Department
Mr. U. Ferretti

Research & Development Director
RIELLO S.p.A. - Burner Department
Mr. F. Comencini

2 Information and general warnings

2.1 Information about the instruction manual

2.1.1 Introduction

The instruction manual supplied with the burner:

- ➤ is an integral and essential part of the product and must not be separated from it; it must therefore be kept carefully for any necessary consultation and must accompany the burner even if it is transferred to another owner or user, or to another system. If the manual is lost or damaged, another copy must be requested from the Technical Assistance Service of the area;
- ➤ is designed for use by qualified personnel;
- ➤ offers important indications and instructions relating to the installation safety, start-up, use and maintenance of the burner.

Symbols used in the manual

In some parts of the manual you will see triangular DANGER signs. Pay great attention to these, as they indicate a situation of potential danger.

2.1.2 General dangers

The **dangers** can be of **3 levels**, as indicated below.

Maximum danger level!
This symbol indicates operations which, if not carried out correctly, cause serious injury, death or long-term health risks.

This symbol indicates operations which, if not carried out correctly, may cause serious injury, death or long-term health risks.

This symbol indicates operations which, if not carried out correctly, may cause damage to the machine and/or injury to people.

2.1.3 Other symbols

DANGER: LIVE COMPONENTS

This symbol indicates operations which, if not carried out correctly, lead to electric shocks with lethal consequences.

DANGER: FLAMMABLE MATERIAL

This symbol indicates the presence of flammable materials.

DANGER: BURNING

This symbol indicates the risks of burns due to high temperatures.

DANGER: CRUSHING OF LIMBS

This symbol indicates the presence of moving parts: danger of crushing of limbs.

WARNING: MOVING PARTS

This symbol indicates that you must keep limbs away from moving mechanical parts; danger of crushing.

DANGER: EXPLOSION

This symbol signals places where an explosive atmosphere may be present. An explosive atmosphere is defined as a mixture - under atmospheric conditions - of air and flammable substances in the form of gases, vapours, mist or dust in which, after ignition has occurred, combustion spreads to the entire unburned mixture.

PERSONAL PROTECTION EQUIPMENT

These symbols indicate the equipment that must be worn and kept by the operator for protection against threats against safety and/or health while at work.

OBLIGATION TO ASSEMBLE THE COVER AND ALL THE SAFETY AND PROTECTION DEVICES

This symbol signals the obligation to reassemble the cover and all the safety and protection devices of the burner after any maintenance, cleaning or checking operations.

ENVIRONMENTAL PROTECTION

This symbol gives indications for the use of the machine with respect for the environment.

IMPORTANT INFORMATION

This symbol indicates important information that you must bear in mind.

➤ This symbol indicates a list.

Abbreviations used

Ch.	Chapter
Fig.	Figure
Page	Page
Sec.	Section
Tab.	Table

2.1.4 Delivery of the system and the instruction manual

When the system is delivered, it is important that:

➤ the instruction manual is delivered to the user by the system manufacturer, with the recommendation to keep it in the room where the heat generator is to be installed.

➤ The instruction manual shows:
– the serial number of the burner;

.....

– the address and telephone number of the nearest Assistance Centre;

.....
.....
.....

➤ The system supplier must carefully inform the user about:
– the use of the system;
– any further tests that may be required before activating the system;
– maintenance, and the need to have the system checked at least once a year by a representative of the manufacturer or another specialised technician.
To ensure a periodic check, the manufacturer recommends the drawing up of a Maintenance Contract.

2.2 Guarantee and responsibility

The manufacturer guarantees its new products from the date of installation, in accordance with the regulations in force and/or the sales contract. At the moment of the first start-up, check that the burner is integral and complete.

WARNING

Failure to observe the information given in this manual, operating negligence, incorrect installation and carrying out of non authorised modifications will result in the annulment by the manufacturer of the guarantee that it supplies with the burner.

In particular, the rights to the guarantee and the responsibility will no longer be valid, in the event of damage to things or injury to people, if such damage/injury was due to any of the following causes:

➤ incorrect installation, start-up, use and maintenance of the burner;
➤ improper, incorrect or unreasonable use of the burner;
➤ intervention of unqualified personnel;
➤ carrying out of unauthorised modifications on the equipment;
➤ use of the burner with safety devices that are faulty, incorrectly applied and/or not working;
➤ installation of untested supplementary components on the burner;
➤ powering of the burner with unsuitable fuels;
➤ faults in the fuel supply system;
➤ continuation of use of the burner when a fault has occurred;
➤ repairs and/or overhauls incorrectly carried out;
➤ modification of the combustion chamber with inserts that prevent the regular development of the structurally established flame;
➤ insufficient and inappropriate surveillance and care of those burner components most likely to be subject to wear and tear;
➤ use of non-original components, including spare parts, kits, accessories and optional;
➤ force majeure.

The manufacturer furthermore declines any and every responsibility for the failure to observe the contents of this manual.

3 Safety and prevention

3.1 Introduction

The burners have been designed and built in compliance with current regulations and directives, applying the known technical rules of safety and envisaging all the potential danger situations.

It is necessary, however, to bear in mind that the imprudent and clumsy use of the equipment may lead to situations of death risk for the user or third parties, as well as the damaging of the burner or other items. Inattention, thoughtlessness and excessive confidence often cause accidents; the same applies to tiredness and sleepiness.

It is a good idea to remember the following:

➤ The burner must only be used as expressly described. Any other use should be considered improper and therefore dangerous.

In particular:

it can be applied to boilers operating with water, steam, diathermic oil, and to other uses expressly foreseen by the manufacturer;

the type and pressure of the fuel, the voltage and frequency of the electrical power supply, the minimum and maximum deliveries for which the burner has been regulated, the pressurisation of the combustion chamber, the dimensions of the combustion chamber and the room temperature must all be within the values indicated in the instruction manual.

➤ Modification of the burner to alter its performance and destinations is not allowed.

➤ The burner must be used in exemplary technical safety conditions. Any disturbances that could compromise safety must be quickly eliminated.

➤ Opening or tampering with the burner components is not allowed, apart from the parts requiring maintenance.

➤ Only those parts envisaged by the manufacturer can be replaced.

WARNING

The manufacturer guarantees safety and proper functioning only if all burner components are intact and positioned correctly.

3.2 Personnel training

The user is the person, body or company that has acquired the machine and intends to use it for the specific purpose. He is responsible for the machine and for the training of the people working around it.

The user:

➤ undertakes to entrust the machine exclusively to suitably trained and qualified personnel;

➤ undertakes to inform his personnel in a suitable way about the application and observance of the safety instructions. With that aim, the user undertakes to ensure that everyone knows the use and safety instructions for his own duties.

➤ Personnel must follow all the danger and caution indications shown on the machine.

➤ Personnel must not carry out, on their own initiative, operations or interventions that are not within their province.

➤ Personnel are obliged to inform their superiors of every problem or dangerous situation that may arise.

➤ The assembly of parts of other makes, or any modifications, can alter the characteristics of the machine and hence compromise operating safety. The manufacturing company therefore accepts no responsibility whatsoever for any which may result from the use of non-original parts.

In addition:

➤ must take all the measures necessary to prevent unauthorised people gaining access to the machine;

➤ the user must inform the manufacturer if faults or malfunctioning of the accident prevention systems are noticed, along with any presumed danger situation;

➤ personnel must always use the personal protective equipment envisaged by legislation and follow the indications given in this manual.

4 Technical description of the burner

4.1 Burner designation

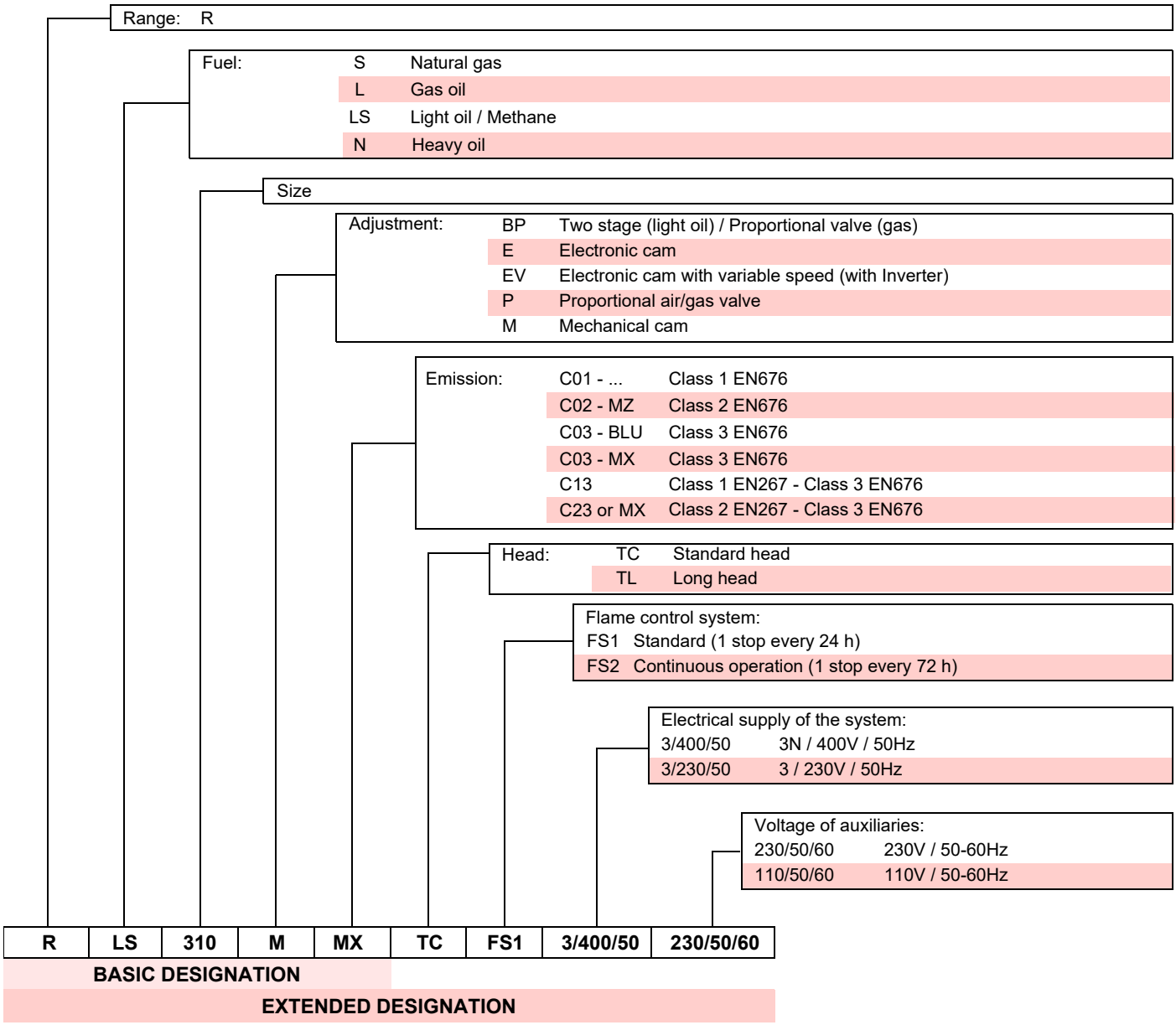

4.2 Models available

Designation	Voltage	Start-up	Code
RLS 310/M MX	3/400/50	Star/Triangle	20087651
	3/230/50	Direct	20087647
	3/400/50	Direct	20087648
RLS 410/M MX	3/400/50	Star/Triangle	20076483
	3/230/50	Direct	20087649
	3/400/50	Direct	20087650
RLS 510/M MX	3/400/50	Star/Triangle	20087652
RLS 610/M MX	3/400/50	Star/Triangle	20087653

Tab. A

4.3 Burner categories - Countries of destination

Gas category	Destination country
I_{2H}	SE - FI - AT - GR - DK - ES - GB - IT - IE - PT - IS - CH - NO
I_{2ELL}	DE
I_{2L}	NL
I_{2Er}	FR
$I_{2E(R)B}$	BE
I_{2E}	LU - PL

Tab. B

4.4 Technical data

Model			RLS 310/M MX	RLS 410/M MX	RLS 510/M MX	RLS 610/M MX
Type			1161T	1162T	1163T	1164T
Power (1) Delivery (1)	min - max	kW Kg/h	600/1200 - 3600 50/100- 305	640/1500 - 4200 55/126- 352	660/1800 - 5170 56/195- 435	1000/2200 - 6155 110/185- 516
Fuels			Natural gas: G20 (methane gas) - G21 - G22 - G23 - G25 Light oil, max. viscosity at 20 °C: 6 mm^2/s (1.5°E - 6 cSt)			
Gas pressure at max. output (2) Gas: G20/G25		mbar	31.8/47.4	47.3/70.6	47.8/71.3	68.2/101.8
Operation			FS1: Intermittent (min. 1 stop in 24 hours)			
Pump Minimum output at 16.5 bar Pressure range		 kg/h bar	TA 3 700 7/40	TA 4 930 7/40	TA 5 1270 7/30	
Fuel temperature		°c max	140			
Nozzles		number	1			
Standard applications			Boilers: water, steam, diathermic oil			
Ambient temperature		°C	0 - 40			
Combustion air temperature		°C max	60			
Noise level (3) Sound pressure Sound power		dB(A)	 78 89	 80 91	 82.5 93.5	 85 96

Tab. C

(1) Reference conditions: Ambient temperature 20°C - Gas temperature 15°C - Barometric pressure 1013 mbar - Altitude 0 m a.s.l.

(2) Pressure on the socket 5) (Fig. 5) with zero pressure in the combustion chamber and at maximum burner output.

(3) Sound pressure measured in manufacturer's combustion laboratory, with burner operating on test boiler and at maximum rated output. The sound power is measured with the “Free Field” method, as per EN 15036, and according to an accurate “Accuracy: Category 3”, as described by EN ISO 3746”.

4.5 Electrical data

DIRECT START UP

Model		RLS 310/M MX	RLS 410/M MX	RLS 310/M MX	RLS 410/M MX
Main electrical supply		3 ~ 230V +/-10% 50 Hz		3N ~ 400V +/-10% 50 Hz	
Fan motor IE2	rpm V kW A	2900 230/400 7.5 23.9 - 13.8	2920 230/400 9.2 29.3- 16.9	2900 230/400 7.5 23.9 - 13.8	2920 230/400 9.2 29.3 - 16.9
Ignition transformer	V1 - V2 I1 - I2	230 V - 2 x 5 kV 1.9 A - 35 mA			
Absorbed electrical power Gas Light oil	kW max	9.1 10.9	10.8 12.6	9.1 10.9	10.8 12.6
Protection level		IP 54			

STAR - TRIANGLE START UP

Model		RLS 310/M MX	RLS 410/M MX	RLS 510/M MX	RLS 610/M MX
Main electrical supply		3N ~ 400V +/-10% 50 Hz			
Fan motor IE2	rpm V kW A	2900 400/690 7.5 13.8 - 8	2920 400/690 9.2 16.9 - 9.7	2880 400/690 12 21.2 - 12.2	2920 400/690 15 27 - 15.6
Pump motor	rpm V kW A	2870 220 - 380 1.5 5.9 - 3.4			
Ignition transformer	V1 - V2 I1 - I2	230 V - 2 x 5 kV 1.9 A - 35 mA			
Absorbed electrical power Gas Light oil	kW max	9.1 10.9	10.8 12.6	14 15.8	17 18.8
Protection level		IP 54			

Tab. D

DIRECT START UP

Model		RLS 310/M MX	RLS 410/M MX	RLS 310/M MX	RLS 410/M MX
Main electrical supply		3 ~ 230V +/-10% 50 Hz		3 ~ 400V +/-10% 50 Hz	
Fan motor IE3	rpm V kW A	2900 230/400 7.5 24 - 14	2920 230/400 9.2 28.6 - 16.5	2900 230/400 7.5 24 - 14	2920 230/400 9.2 28.6 - 16.5
Absorbed electrical power Gas Light oil	kW max	9.1 10.9	10.6 12.4	9.1 10.9	10.6 12.4

STAR - TRIANGLE START UP

Model		RLS 310/M MX	RLS 410/M MX	RLS 510/M MX	RLS 610/M MX
Main electrical supply		3 ~ 400V +/-10% 50 Hz			
Fan motor IE3	rpm V kW A	2920 400/690 7.5 14 - 8.1	2880 400/690 9.2 16.8 - 9.7	2880 400/690 12 21.8 - 12.6	2880 400/690 15 27 - 15.6
Absorbed electrical power Gas Light oil	kW max	8.8 10.6	10.6 12.4	13.9 15.7	16.9 18.7

Tab. E

4.6 Burner weight

The weight of the burner complete with its packaging is shown in Tab. F.

Model	kg
RLS 310/M MX	300
RLS 410/M MX	300
RLS 510/M MX	300
RLS 610/M MX	320

Tab. F

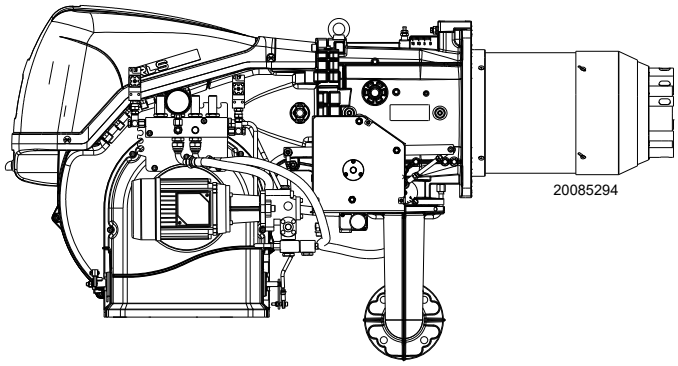

Fig. 1

4.7 Maximum dimensions

The maximum dimensions of the burner are given in Fig. 2.

Bear in mind that inspection of the combustion head requires the burner to be opened and the rear part turned on the hinge.

The maximum dimensions of the open burner are indicated by the L and R positions.

The I position is reference for the refractory thickness of the boiler door.

* The gas adaptor is set also for DN 80 bore.

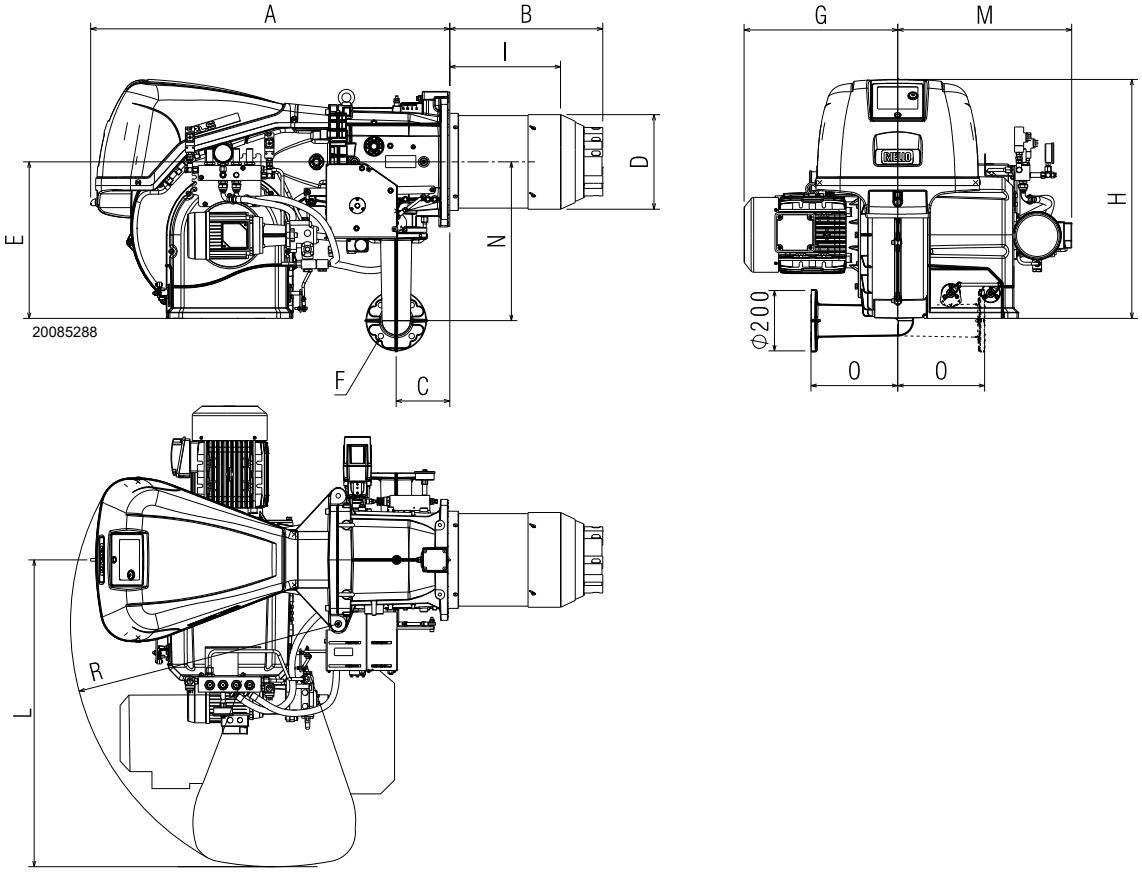

Fig. 2

mm	A	B	C	D	E	F*	G	H	I	L	M	N	O	R
RLS 310/M MX	1190	507	178	313	520	DN65	490	790	340	1015	576	528	290	890
RLS 410/M MX	1190	507	178	313	520	DN65	508	790	340	1015	576	528	290	890
RLS 510/M MX	1190	507	178	313	520	DN65	508	790	340	1015	576	528	290	890
RLS 610/M MX	1190	510	178	334	520	DN65	580	790	360	1015	576	528	290	890

Tab. G

4.8 Firing rates

The **MAXIMUM OUTPUT** is chosen from within the diagram area (Fig. 3).

The **MINIMUM OUTPUT** must not be lower than the minimum limit of the diagram:

Model	kW
RLS 310/M MX	600
RLS 410/M MX	640
RLS 510/M MX	660
RLS 610/M MX Gas	1000
RLS 610/M MX Light oil	1300

Tab. H

WARNING

The firing rate value (Fig. 3) has been obtained considering an ambient temperature of 20 °C, an atmospheric pressure of 1013 mbar (approx. 0 m a.s.l.), and with the combustion head adjusted as shown on page 21.

WARNING

Pre-calibration of the combustion head only for the burner model RLS 310/M MX:

If the maximum burner output of the burner falls within:

- area A of the firing rate, it is necessary to replace the gas nozzles with those supplied (No. 8 gas nozzles Ø 5.3), Fig. 15.

- area B of the firing rate, no modifications are required.

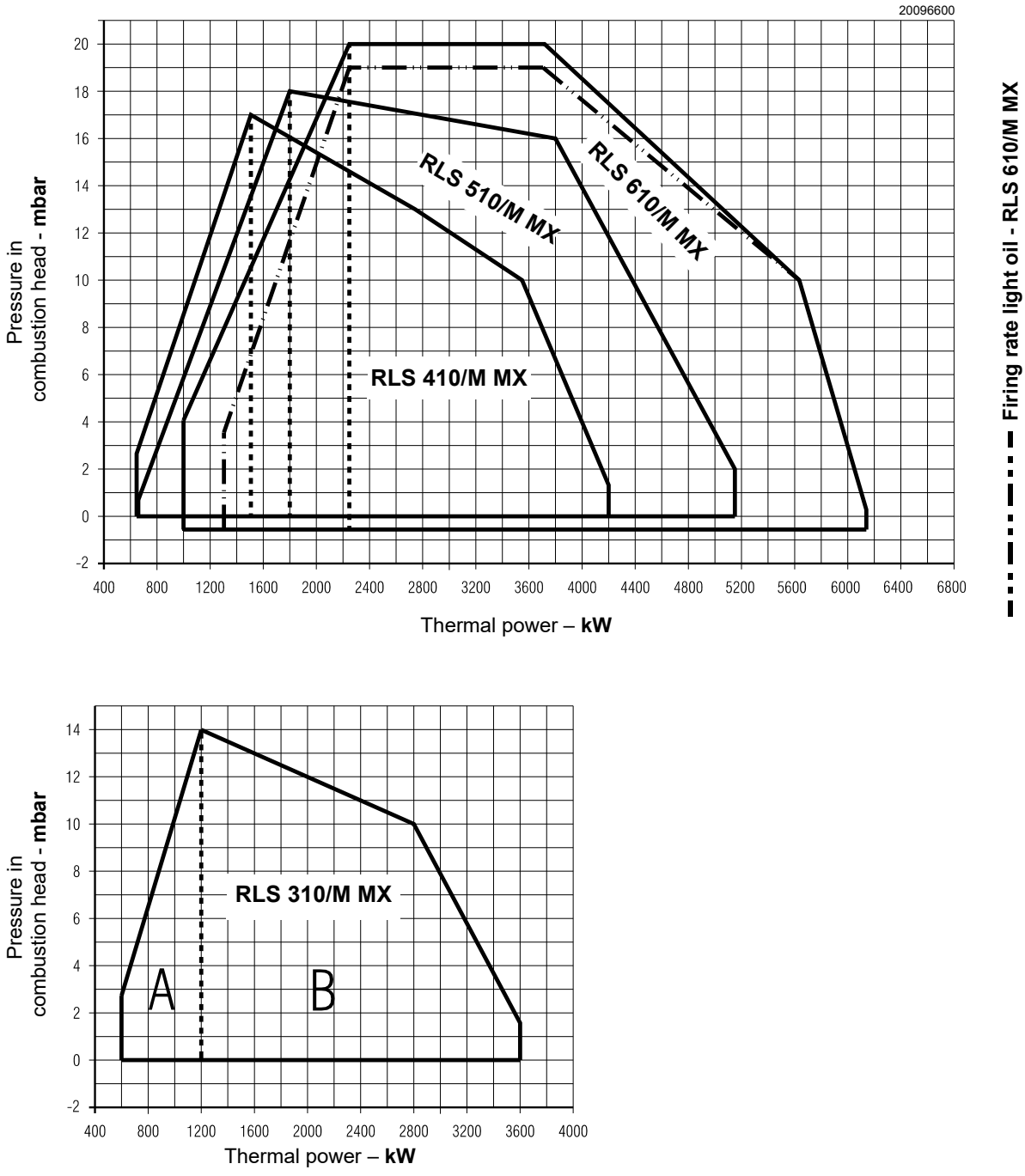

Fig. 3

4.9 Test boiler

The burner/boiler combination does not pose any problems if the boiler is EC approved and its combustion chamber dimensions are similar to those indicated in the diagram (Fig. 4).

If the burner must be combined with a boiler that has not been EC approved and/or its combustion chamber dimensions are clearly smaller than those indicated in the diagram, consult the manufacturer.

The firing rates were set in relation to special test boilers, according to EN 676 regulations.

In Fig. 4 you can see the diameter and length of the test combustion chamber.

Example: RLS 510/M MX
Output 5000 kW - diameter 100 cm - length 5 m

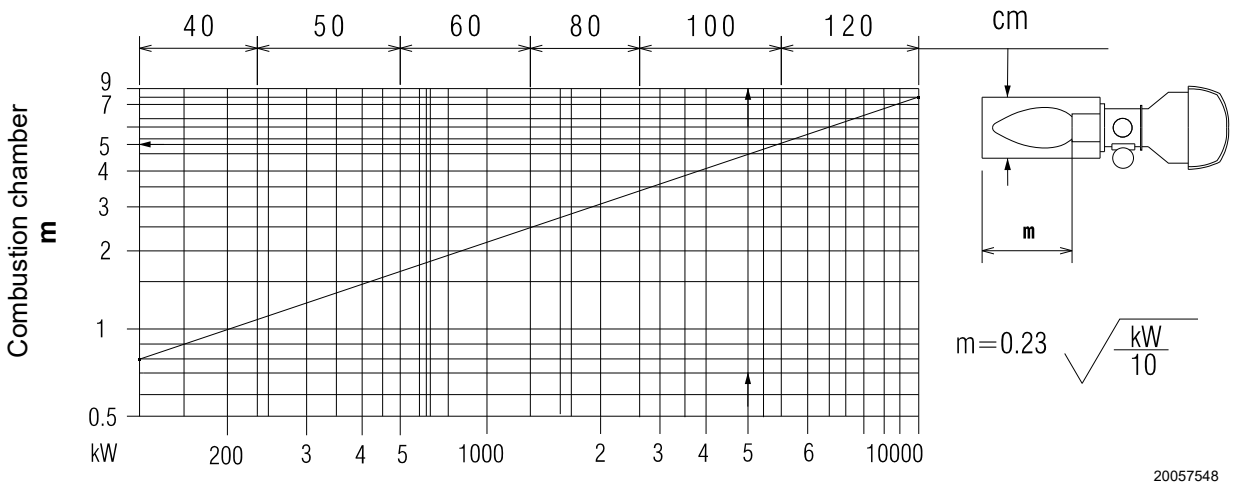

Fig. 4

4.10 Burner equipment

Gasket for gas train adaptor . . . . . No. 1
Adaptor for gas train . . . . . No. 1
Screws for fixing the gas train adaptor: M 16 x 70 . . . . . No. 4
Thermal insulation screen . . . . . No. 1
M 18 x 60 screws to secure the burner flange to the boiler . . . . . No. 4
Flexible hoses . . . . . No. 2
Hydraulic fittings . . . . . No. 2
Cable grommets kit for optional electrical wiring input . . . . No. 1
M16 x 6 studs for fixing the gas elbow to the pipe coupling . . . . . No. 4
M16 nuts to fix the gas elbow to the pipe coupling . . . . . No. 4
Gas nozzles (only for version RLS 310/M MX) . . . . . No. 8
Instructions . . . . . No. 1
Spare parts list . . . . . No. 1

4.11 Burner description

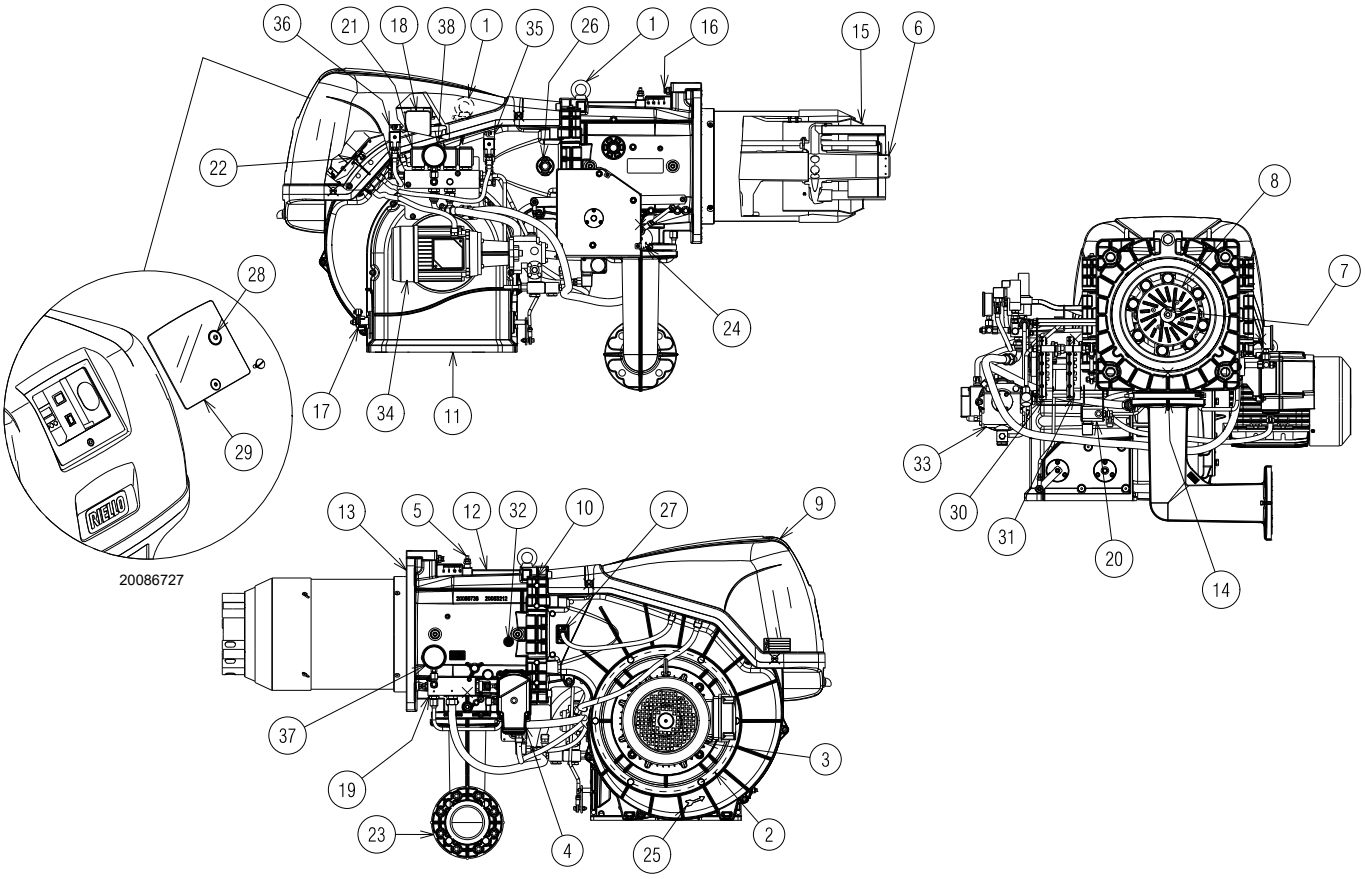

Fig. 5

1 Lifting rings
2 Fan
3 Fan motor
4 Air/gas servomotor
5 Combustion head gas pressure test point
6 Combustion head
7 Ignition electrodes
8 Flame stability disk
9 Electrical panel casing
10 Hinge for opening the burner
11 Fan air inlet
12 Pipe coupling
13 Gasket for boiler fixing
14 Gas butterfly valve
15 Shutter
16 Combustion head movement screw
17 Air damper control lever
18 Air pressure switch
19 Oil modulator
20 Maximum gas pressure switch with pressure test point
21 Valve group
22 Pressure test point for air pressure switch “+”
23 Gas train adapter
24 Gas butterfly valve control lever
25 Indication for checking the rotation direction of the purging motor
26 Flame inspection window
27 UV sensor (QRI cell)
28 Reset button
29 Transparent protection
30 Variable profile cam (air)
31 Variable profile cam (gas)
32 Combustion head air pressure test point
33 Pump
34 Pump motor
35 Minimum oil pressure switch
36 Maximum oil pressure switch
37 Nozzle return pressure gauge
38 Nozzle delivery pressure gauge

The burner can be opened to the right or to the left without links to the fuel supply side.

WARNING

To open the burner see section “Access to head internal part” on page 20.

4.12 Electrical panel description

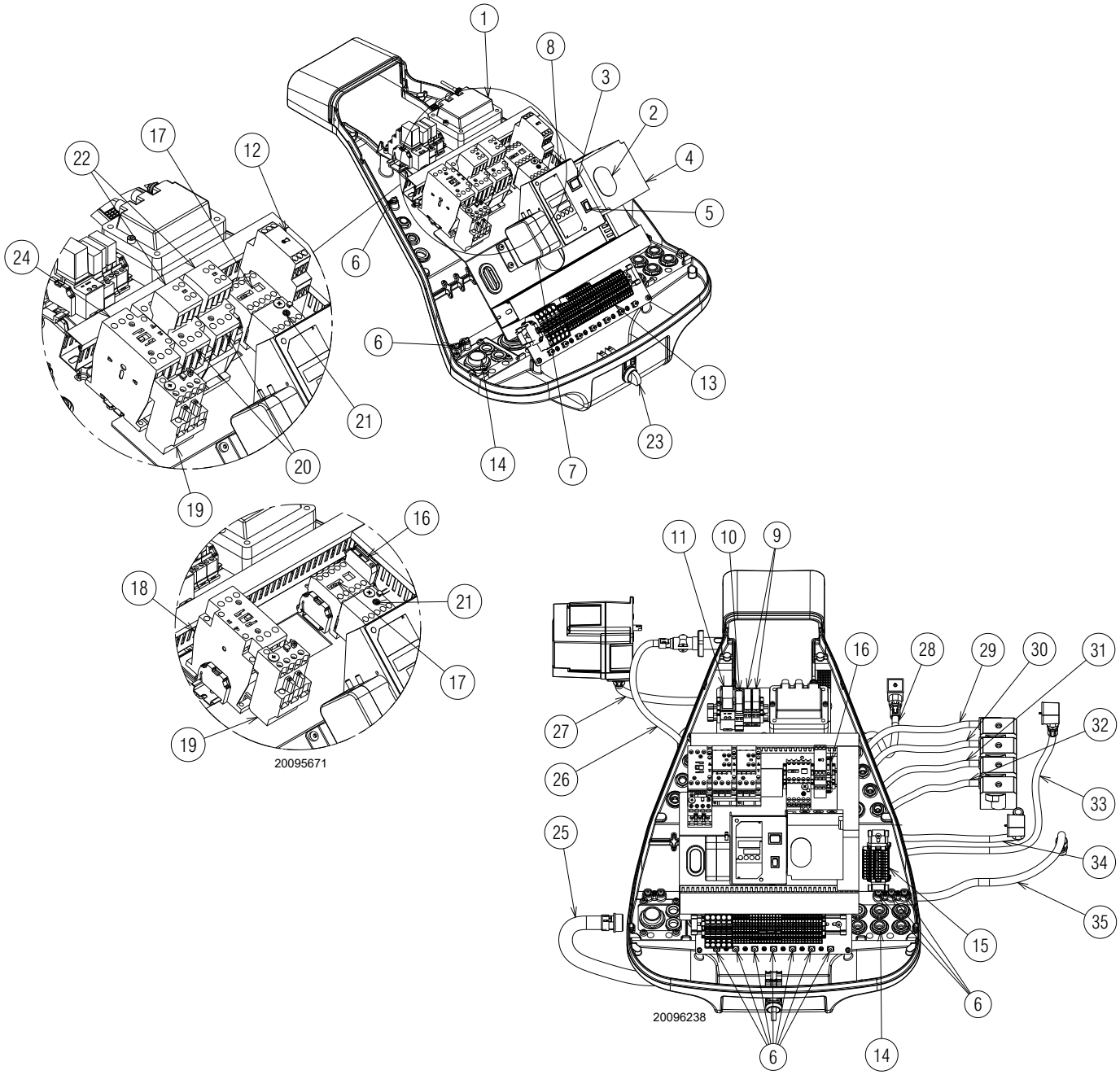

Fig. 6

1 Ignition transformer
2 Burner state indicator light and reset button.
3 OFF-automatic-manual selector
4 Electrical control box
5 Power increase - power reduction selector
6 Earth terminal
7 Air pressure switch
8 Bracket for applying the kits
9 Relay with clean contacts for signalling the burner is in lock-out and that the burner is operating
10 Oil enable relay
11 Oil enable relay
12 Timer for star/triangle start up
13 Main terminal supply board
14 Supply cables and external connections passage. See section “Electrical wiring” on page 28
15 Valve group terminal board
16 Auxiliary circuits fuse (includes a spare fuse)
17 Pump motor contact maker
18 Direct start up line contactor
19 Fan motor thermal relay (with reset button)
20 Triangle contactor (Star/triangle start up)
Star contactor (Star/triangle start up)
21 Pump motor thermal relay
22 Auxiliary contacts (Star/triangle start up)
23 Fuel selector
24 Star/triangle start-up line contactor
25 Fan motor cables sheath
26 Flame sensor sheath
27 Servomotor sheath
28 Maximum gas pressure switch sheath
29 Safety valve sheath (VS1)
30 Return line valve sheath (VR)
31 Working valve sheath (VF)
32 Safety valve sheath (VS)
33 Maximum oil pressure switch sheath
34 Minimum oil pressure switch sheath
35 Pump motor cables sheath

4.13 Control box LFL

Warnings

WARNING

To avoid accidents, material or environmental damage, observe the following instructions!

The control box LFL is a safety device! Avoid opening or modifying it, or forcing its operation. Riello S.p.A. cannot assume any responsibility for damage resulting from unauthorised interventions!

- ➤ All interventions (assembly and installation operations, assistance, etc.) must be carried out by qualified personnel.
- ➤ Before modifying the wiring in the control box connection area, fully disconnect the system from the power supply (omnipolar separation). Check the system is not powered and cannot be accidentally reconnected. Failure to do this will lead to the risk of electrocution.
- ➤ Protection against electrocution from the control box and all connected electric components is obtained with the correct assembly.
- ➤ Before any intervention (assembly and installation operations, assistance, etc.), ensure the wiring is in order and that the parameters are correctly set, then make the safety checks.
- ➤ Falls and collisions can negatively affect the safety functions.
  In this case, the control box must not be operated, even if it displays no evident damage.
- ➤ Press the reset button of the burner lockout command or the reset button (by applying a force of not more than 10 N), without the aid of tools or sharp objects. Do not keep the button pressed for more than 10 seconds since it would damage the internal relay.

For the safety and reliability of the control box, comply with the following instructions:
– avoid conditions that can favour the development of condensate and humidity. Otherwise, before switching on again, make sure that the entire control box is perfectly dry!
– Static charges must be avoided since they can damage the control box's electronic components when touched.

Fig. 7

Technical data

Mains voltage	AC 230 V +15 % / -15 %
Mains frequency	50 / 60 Hz ±6%
Fuse (Internal)	T6.3H250V
Primary fuse (external)	max. 10 A
Weight	approx. 1 kg
Power absorption	approx. AC 3.5 VA
Protection level	IP40
Safety class	II
Input current at terminal 1	max. 5 A continuous (peaks of 20 A / 20 ms)
Load on the control terminals	Max. 4 A continuous (peaks of 20 A / 20 ms)
Environmental conditions:	
Operation	DIN EN 60721-3-1
Climatic conditions	Class 1K3
Mechanical conditions	Class 1M2
Temperature range	-20...+60°C
Humidity	< 95 % r.h.

Mechanical structure

The control box is made of plastic to resist knocks, heat and flame propagation.
The electronic flame signal amplifier is integrated into the control box.

4.14 Servomotor SQM40 ...

Warnings

WARNING

To avoid accidents, material or environmental damage, observe the following instructions!

Avoid opening, modifying or forcing the servomotor.

- ➤ All interventions (assembly and installation operations, assistance, etc.) must be carried out by qualified personnel.
- ➤ Falls and collisions can negatively affect the safety functions. In this case, the servomotor must not be operated, even if it displays no evident damage.
- ➤ Fully disconnect the burner from the mains when working near terminals and servomotor connections.
- ➤ Condensation and exposure to water are not allowed.
- ➤ For safety reasons, the servomotor must be checked after long periods of non-use.

S8907

Fig. 8

Technical data

Mains voltage	230 V -15% +10%
Mains frequency	50 / 60 Hz
Power absorption	7 ... 15 VA
Motor	Synchronous
Drive angle	Varying between 0° and 135°

WARNING

Never adjust the red cam No. 1 more than 135° to prevent serious or irreversible damage to the mechanical adjustment parts.

Protection level	Max. IP 66, with appropriate cable entry
Cable entry	2 x M16
Cable connection	terminal board for 0.5mm^2 (min.) and 2.5mm^2 (max.)
Rotation direction	Anticlockwise
Rated torque (max.)	10 Nm
Holding torque	5 Nm
Operation time	30 s. at 90°
Weight	approx. 2 kg
Environmental conditions:	
Operation	-20....+60° C
Transport and storage	-20...+60°C

Tab. I

4.15 Calibration of the thermal relay

The thermal relay serves to avoid damage to the motor due to an excessive absorption increase or if a phase is missing.

For calibration **2)**, see the table in the wiring diagram.

To reset, in case of an intervention of the thermal relay, press the “RESET” button 1) of Fig. 9.

The red “TEST” button 3) opens the NC (95-96) contact and stops the motor.

CAUTION

The automatic reset can be dangerous. This operation is not foreseen in the burner operation. **Therefore do not position the “RESET” button 1) on “A”.**

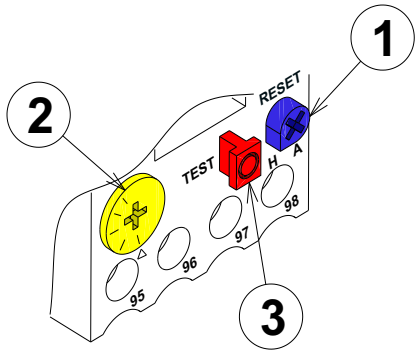

20073932

Fig. 9

5 Installation

5.1 Notes on safety for the installation

After carefully cleaning all around the area where the burner will be installed, and arranging the correct lighting of the environment, proceed with the installation operations.

DANGER

All the installation, maintenance and disassembly operations must be carried out with the electricity supply disconnected.

WARNING

The installation of the burner must be carried out by qualified personnel, as indicated in this manual and in compliance with the standards and regulations of the laws in force.

DANGER

Combustion air inside the boiler must be free from hazardous mixes (e.g.: chloride, fluoride, halogen); if present, it is highly recommended to carry out cleaning and maintenance more frequently.

5.2 Handling

The burner packaging includes a wooden platform, it is therefore possible to move the burner (still packaged) with a transpallet truck or fork lift truck.

WARNING

The handling operations for the burner can be highly dangerous if not carried out with the greatest attention: keep any unauthorised people at a distance; check the integrity and suitableness of the available means of handling.
Check also that the area in which you are working is empty and that there is an adequate escape area (i.e. a free, safe area to which you can quickly move if the burner should fall).
When handling, keep the load at not more than 20-25 cm from the ground.

After positioning the burner near the installation point, correctly dispose of all residual packaging, separating the various types of material.

CAUTION

Before proceeding with the installation operations, carefully clean all around the area where the burner will be installed.

5.3 Preliminary checks

Checking the consignment

CAUTION

After removing all the packaging, check the integrity of the contents. In the event of doubt, do not use the burner; contact the supplier.

The packaging elements (wooden cage or cardboard box, nails, clips, plastic bags, etc.) must not be abandoned as they are potential sources of danger and pollution; they should be collected and disposed of in the appropriate places.

Checking the characteristics of the burner

Check the identification label of the burner, showing:
- ➤ the model (**A**)(Fig. 10) and type of burner (**B**);
- ➤ the year of manufacture, in cryptographic form (**C**);
- ➤ the serial number (**D**);
- ➤ the data for electrical supply and the protection level (**E**);
- ➤ the absorbed electrical power (**F**);
- ➤ the types of gas used and the relative supply pressures (**G**);
- ➤ the data of the burner's minimum and maximum output possibilities (**H**) (see Firing rate)
  Warning. The burner output must be within the boiler's firing rate;
- ➤ the category of the appliance/countries of destination (**I**).

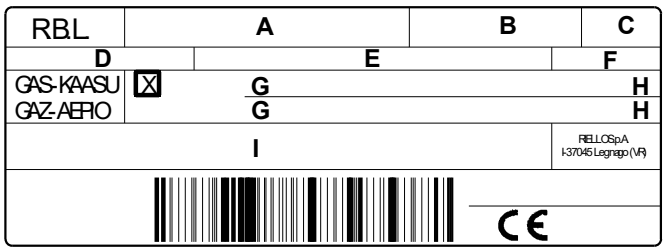

D10411

Fig. 10

WARNING

A burner label, or any other component, that has been tampered with, removed or is missing, prevents the definite identification of the burner and makes any installation or maintenance work difficult.

5.4 Operating position

WARNING

- ➤ The burner is designed to operate only in positions **1**, **2**, **3** and **4** (Fig. 11).
- ➤ Installation **1** is preferable, as it is the only one that allows the maintenance operations as described in this manual.
- ➤ Installations **2**, **3** and **4** permit operation but make maintenance and inspection of the combustion head more difficult.

DANGER

- ➤ Any other position could compromise the correct operation of the appliance.
- ➤ Installation **5** is prohibited for safety reasons.

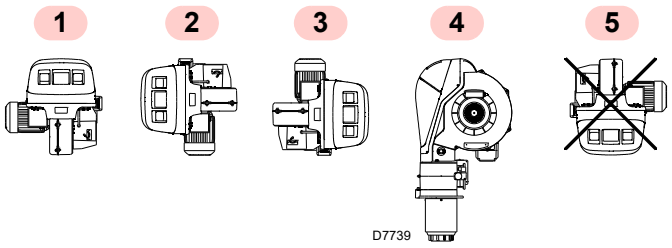

Fig. 11

5.5 Preparing the boiler

5.5.1 Boring the boiler plate

Pierce the closing plate of the combustion chamber, as in Fig. 12. The position of the threaded holes can be marked using the thermal insulation screen supplied with the burner.

5.5.2 Blast tube length

The length of the blast tube must be selected according to the indications provided by the manufacturer of the boiler, and in any case it must be greater than the thickness of the boiler door complete with its fettling.

The refractory can have a conical shape (minimum 60°).

For boilers with front flue passes 1) (Fig. 13) or flame inversion chamber, a protection in refractory material 5) must be inserted between the boiler fettling 2) and the flame funnel 4).

This protective fettling must not compromise the extraction of the blast tube.

For boilers with a water-cooled front piece, a refractory lining 2)-5)(Fig. 13) is not necessary, unless expressly requested by the boiler manufacturer.

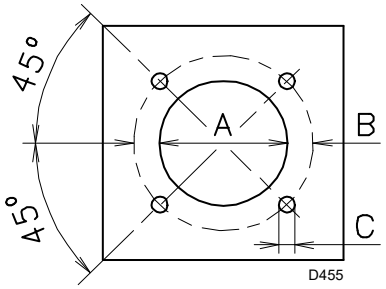

Fig. 12

mm	A	B	C
RLS 310/M MX	335	452	M18
RLS 410/M MX	335	452	M18
RLS 510/M MX	335	452	M18
RLS 610/M MX	350	452	M18

Tab. J

5.6 Securing the burner to the boiler

Prepare a suitable lifting system using rings 3) (Fig. 13).

- ➤ Fit the heat insulation supplied onto the blast tube (4) (Fig. 13).
- ➤ Fit the entire burner onto the boiler hole prepared previously (Fig. 12), and fasten with the screws supplied.

WARNING

The seal between burner and boiler must be airtight.

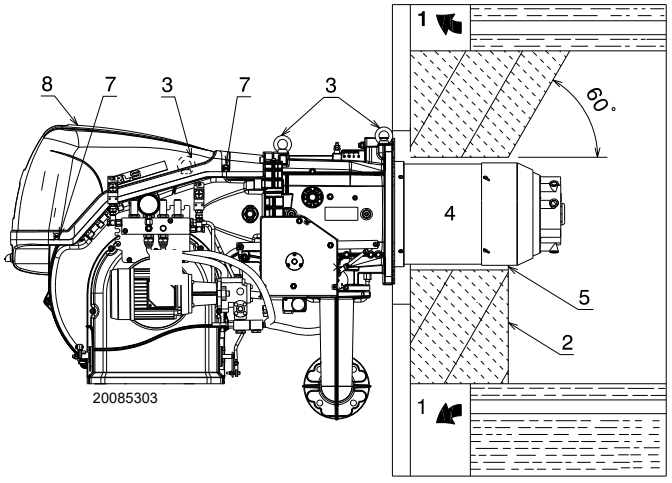

Fig. 13

5.7 Access to head internal part

The burner leaves the factory set for opening to the right, therefore maintaining the pin 1)(Fig. 14) in its housing.

To open the burner towards the right, proceed as follows:

A remove the screw 6) releasing the tie-rod 7)(Fig. 14);
B remove the screws 2);
C open the burner to a maximum of 100-150 mm by rotating around the hinge and release the cables of the electrodes 5);
D fully open the burner as in Fig. 14;
E undo the screw 4) with pressure test point;
F disconnect the light oil pipes by unscrewing the two swivel fittings 8);
G release the head by lifting it from its housing 3), then take out the combustion head.

WARNING

To open the burner from the opposite side, before removing the pin 1)(Fig. 14), make sure that the 4 screws 2) are tight. Then shift the pin 1) to the opposite side, only then is it possible to remove the screws 2); then proceed as described in point **C**.

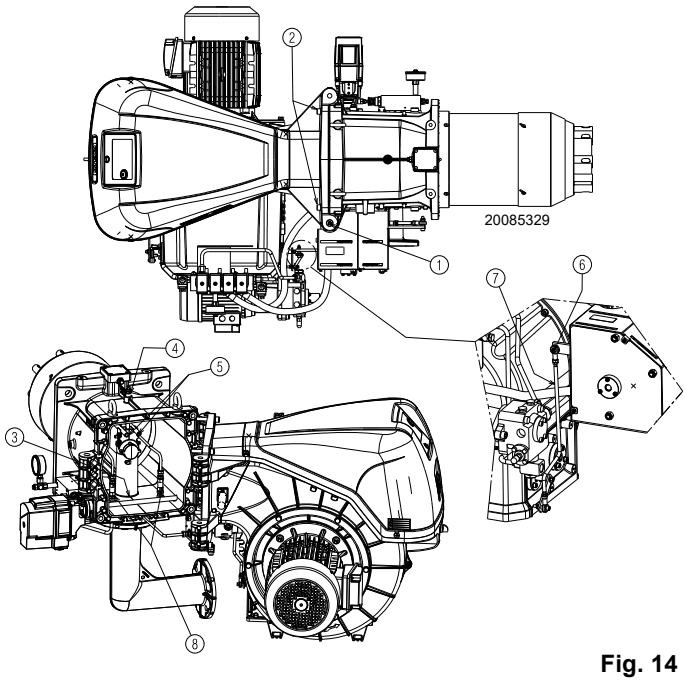

Fig. 14

5.8 Position of the electrodes and central gas nozzles

WARNING

Check that the electrodes are positioned correctly, as in Fig. 15, complying with the dimensions indicated.

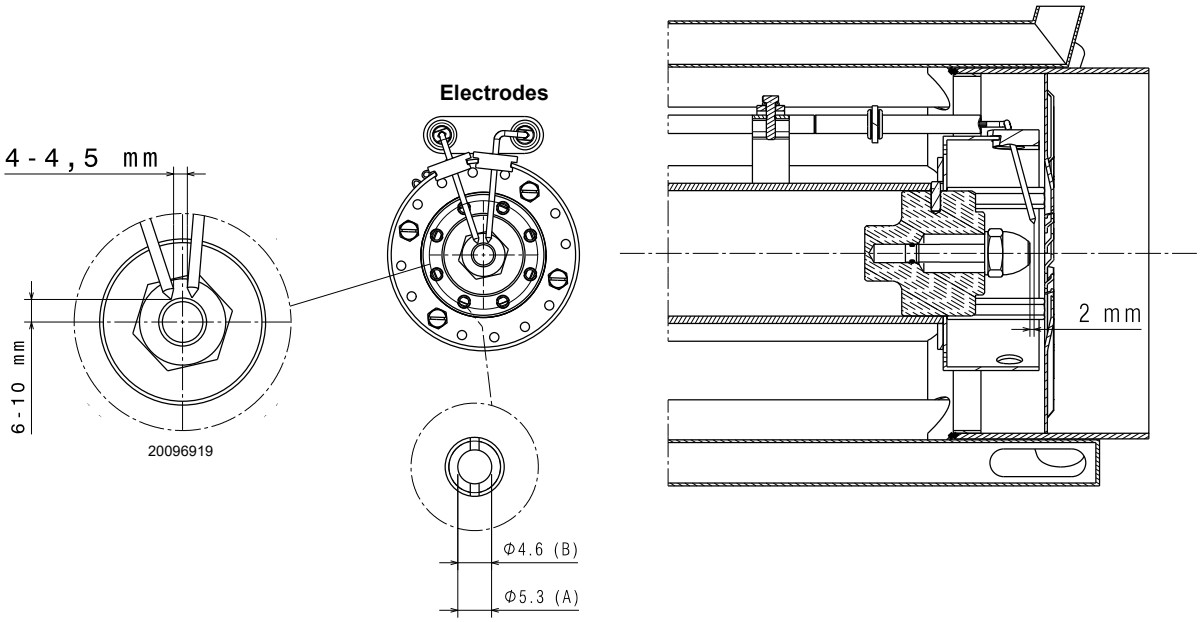

Fig. 15

5.9 Gas butterfly valve

If necessary, replace the gas butterfly valve. The correct position is shown in Fig. 16.

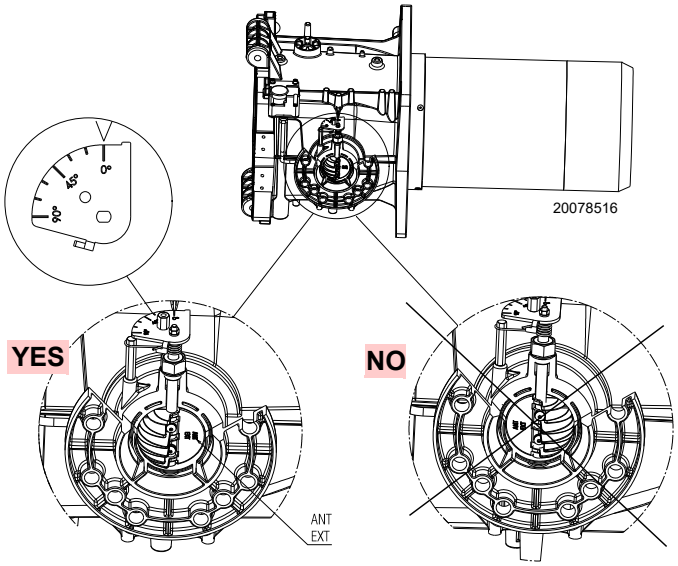

Fig. 16

5.10 Combustion head adjustment

Rotate the screw 1) until the notch you have found corresponds with the front surface of the screw itself. The combustion head is opened by turning the screw 1) anticlockwise.

The combustion head is closed by turning the screw 1) clockwise (Fig. 18).

WARNING

The burner leaves the factory with the combustion head adjusted to notch 0 (Fig. 18).

This adjustment allows you to secure the moving parts when the burner is being transported.

Before starting the burner, carry out the adjustments for the output required and which is indicated in the diagram (Fig. 17).

NOTE:

Depending on the specific application, the adjustment can be modified.

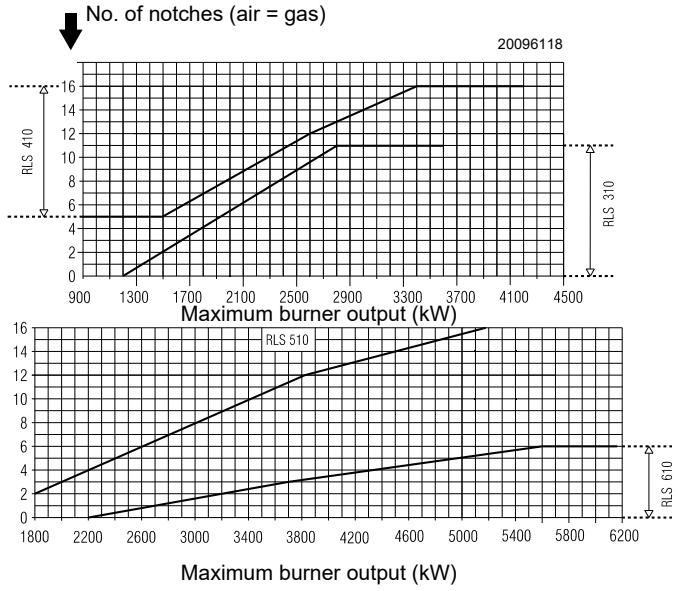

Fig. 17

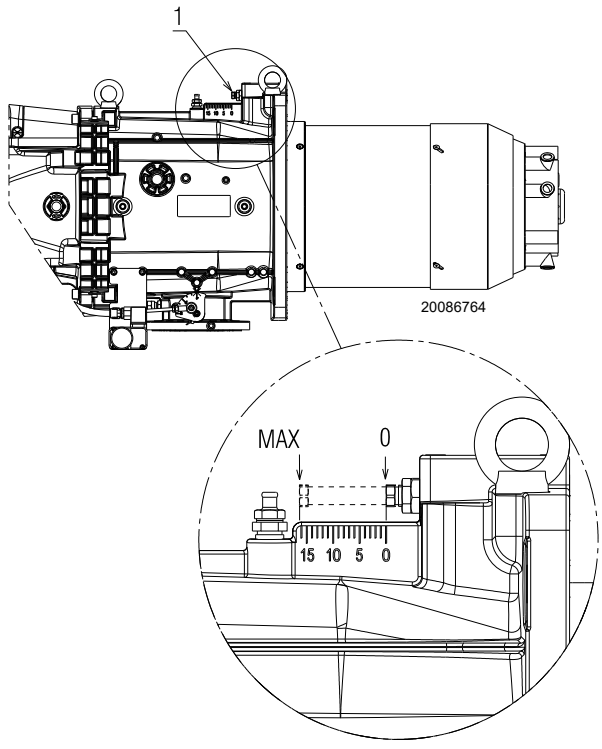

Fig. 18

WARNING

The combustion head can be adjusted within the following fields:

RLS 310/M MX: 0 - 11;

RLS 410/M MX: 5 - 16;

RLS 510/M MX: 2 - 16;

RLS 610/M MX: 0 - 6.

No adjustment can be made outside these intervals.

5.11 Nozzle installation

The burner complies with the emission requirements of the EN 267 standard.

In order to guarantee that emissions do not vary, recommended and/or alternative nozzles specified by the Manufacturer in the Instruction and warning booklet should be used.

WARNING

It is advisable to replace nozzles every year during regular maintenance operations.

CAUTION

The use of nozzles other than those specified by the Manufacturer and inadequate regular maintenance may result into emission limits non-conforming to the values set forth by the regulations in force, and in extremely serious cases, into potential hazards to people and objects.

The manufacturing company shall not be liable for any such damage arising from non-observance of the requirements contained in this manual.

Fit the nozzle with a pipe wrench (24 mm), passing through the central opening of the flame stability disc (Fig. 19).

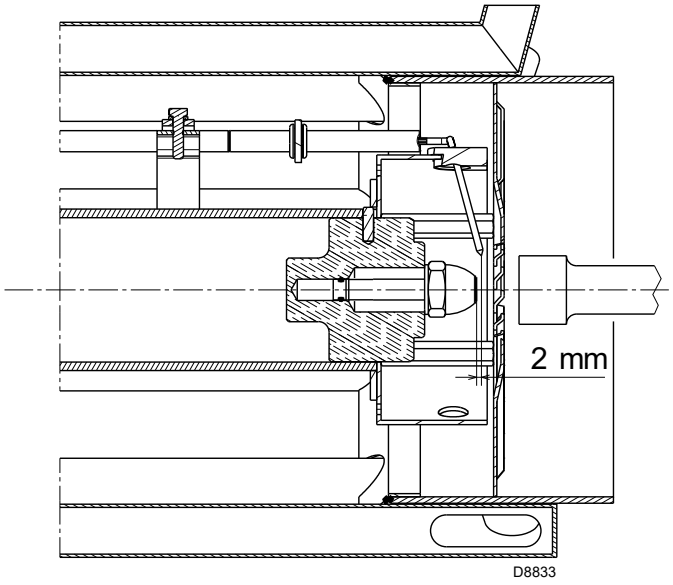

Fig. 19

Fit the nozzles on the nozzle holder without the fuel interception rod.

To calibrate the flow rate range within which the nozzle should operate, adjust the fuel pressure on the nozzle return line, according to and Tab. K.

WARNING

- ➤ Do not use any sealing products such as gaskets, sealing compound, or tape.
- ➤ Be careful to avoid damaging the nozzle sealing seat.
- ➤ The nozzle must be screwed into place tightly but not to the maximum torque value provided by the wrench.

5.11.1 Recommended nozzle

- **Fluidics type N2 45°**

Alternatively:

- **Bergonzo type B5 45° SA**

Complete range of nozzles:

➤ **Bergonzo type B5 45°**
150 - 200 - 225 - 250 - 275 - 300 - 325 - 350 - 375 - 400 - 425 - 450 - 475 - 500 - 525 - 550 - 575 - 600.

➤ **Fluidics type N1 45°**
160 - 180 - 200 - 225 - 250 - 275 - 300 - 330 - 360 - 400 - 450 - 500 - 550 - 600.

➤ **Fluidics type N2 45°**
160 - 180 - 200 - 225 - 250 - 275 - 300 - 330 - 360 - 400 - 450 - 500 - 550 - 600.

	kg/h	Delivery pressure bar	Return pressure bar	kg/h	kW
RLS 310 - 410/M MX	150	21	13	51	600
		21	19	106	1250
	200	22	8.5	67	800
		22	17.5	150	1800
	300	20	7	100	1200
		20	17.5	257	3000
	375	20	6.5	148	1750
		20	15.5	305	3600
	425	20	7.5	68	1950
		20	17	344	4100
RLS 510/M MX	250	24	9	94	1120
		25	15.5	210	2500
	360	24	7.5	116	1380
		25	14	260	3090
	400	24	8.5	153	1820
		25	15	355	4220
	450	24	8	164	1950
		25.5	16	425	5050
RLS 610/M MX	300	20	9.5	125	1500
		20	14	250	3000
	450	20	8	134	1600
		20	14	380	4550
	575	20	9.5	193	2300
		20	17	510	6070

Tab. K

5.12 Light oil supply

5.12.1 Double-pipe circuit

The burner is equipped with a self-priming pump which is capable of feeding itself within the limits listed in the table at the side.

Tank higher than burner A (Fig. 20)
Distance P must not exceed 10 meters in order to avoid straining the pump's seal; distance V must not exceed 4 meters in order to allow the self-priming of the pump even when the tank is almost empty.

Tank lower than burner B (Fig. 20)
Pump depression values higher than 0.45 bar (35 cm Hg) must not be exceeded. because at higher levels gas is released from the fuel, the pump starts making noise and its working life-span decreases.
It is good practice to ensure that the return and suction lines enter the burner from the same height; in this way it will be less probable that the suction line fails to prime or stops priming.

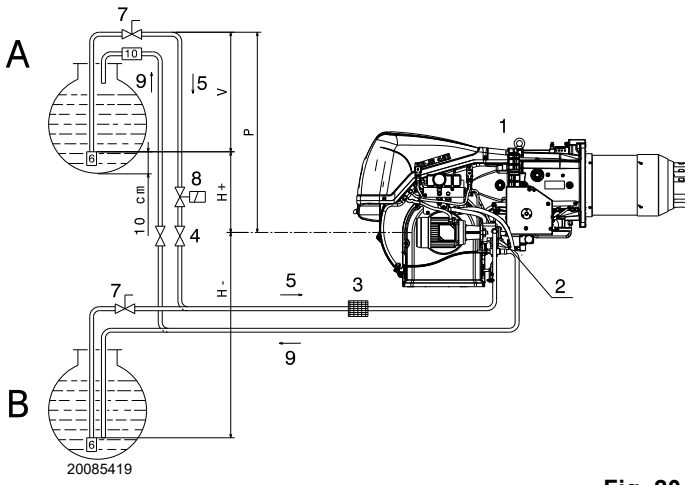

Fig. 20

Key (Fig. 20)

H = Pump/Foot valve height difference
L = Piping length
Ø = Inside pipe diameter
1 = Burner
2 = Pump
3 = Filter
4 = Manual on/off valve
5 = Suction line
6 = Foot valve
7 = Quick closing manual valve with remote control (Italy only)
8 = On/off solenoid valve (Italy only). See electrical layout. Connections to be carried out by the installer (SV).
9 = Return line
10 = Check valve (only Italy)

5.12.2 The loop circuit

A loop circuit consists of a loop of piping departing from and returning to the tank with an auxiliary pump that circulates the fuel under pressure.

A branch connection from the loop feeds the burner.

This circuit is extremely useful whenever the burner pump does not succeed in self-priming because the tank distance and/or height difference are higher than the values listed in the table.

H (m)	L (m)			
	Ø (mm)			
	10	12	14	16
4	14	30	55	95
3.5	13	28	52	89
3	12	26	48	82
2.5	11	24	44	76
2	10	22	41	70
1.5	9	20	37	63
1	8	18	33	57
0.5	7	16	29	51
0	6	14	26	44
-0.5	5	12	22	38
-1	4	10	18	32
-1.5	3	8	15	25
-2		6	11	19
-2.5		4	7	13
-3			4	7

5.12.3 Hydraulic connections

The pumps are equipped with a by-pass that connects return line with suction line.
They are installed on the burner with the by-pass closed by screw 6)(Fig. 22).
It is therefore necessary to connect both hoses to the pump.
The pump will break down immediately if it is run with the return line closed and the by-pass screw inserted.
Remove the plugs from the suction and return connections of the pump.
Insert the hose connections with the supplied seals into the connections and screw them down.
Take care that the hoses are not stretched or twisted during installation.
Place the pipes so that they are not crushed or are in contact with hot parts of the boiler and so it is possible to open the burner.
Connect, finally, the other end of the flexible hoses to the suction and return lines using nipples supplied with the equipment.

5.12.4 Hydraulic circuit diagram

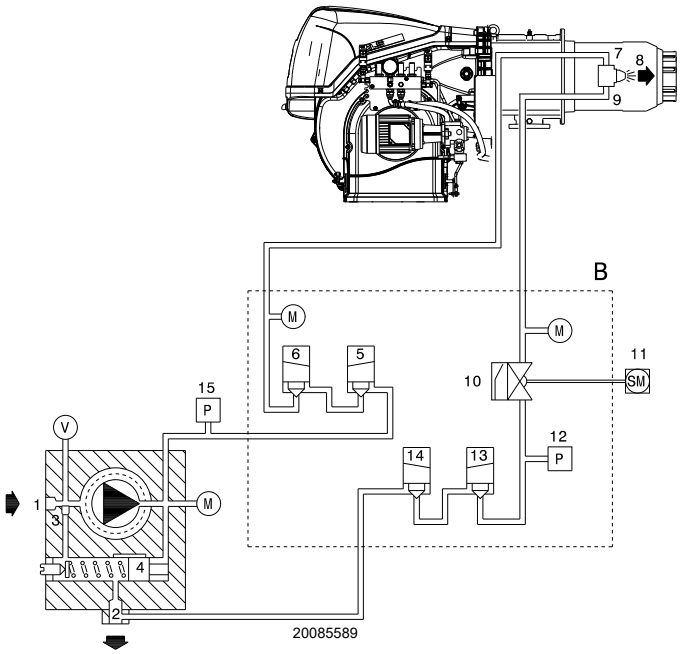

Fig. 21

Key (Fig. 21)

1 Pump suction
2 Pump return line and nozzle return line
3 Pump by-pass screw
4 Pump pressure regulator
5 Safety valve
6 Safety valve
7 Nozzle delivery line
8 Nozzle without interception rod
9 Nozzle return line
10 Pressure adjuster on nozzle return line
11 Servomotor
12 Pressure switch on nozzle return line
13 Safety valve on nozzle return line
14 Safety valve on nozzle return line
15 Pressure switch on pump delivery line
B Oil valve group and pressure variator
M Pressure gauges
V Vacuometer connection

OPERATION

Pre-purging phase:
valves 5), 6), 13) and 14) closed.

Ignition and operation phase:
valves 5), 6), 13) and 14) open.

Stop: All valves closed.

5.12.5 Priming pump

WARNING

Before starting the burner, make sure that the tank return line is not clogged.

Obstructions in the line could cause the sealing organ located on the pump shaft to break.

➤ In order for the pump (Fig. 22) to self-prime, it is vital that the screw 4) of the pump be loosened to vent the air contained in the suction line.

➤ Start the burner by closing the remote controls.
As soon as the burner starts, check the direction of rotation of the fan blade.

➤ The pump can be considered to be primed when the light oil starts coming out of the screw 4). Close the burner and undo the screws 4).

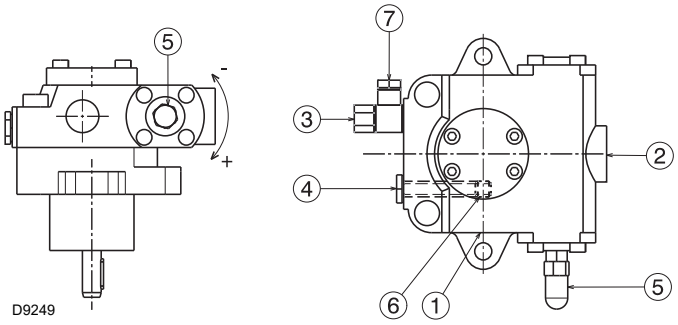

Fig. 22

Key (Fig. 22)

1	Suction line	G 1/2”
2	Return line	G 1/2”
3	Pressure switch connection	G 1/4”
4	Vacuometer connection	G 1/4”
5	Pressure adjuster	
6	By-pass screws	
7	Gauge connection	G 1/4”

MODELS		RLS 310	RLS 410	RLS 510 RLS 610
		TA 3	TA 4	TA 5
Min. delivery rate at 16.5 bar pressure	Kg/h	700	930	1270
Pressure range in outlet line	bar	7 - 40		7 - 30
Max depression in suction line	bar	0,45		0,45
Viscosity range	cSt	2 - 75		2 - 75
Maximum oil temperature	°C	150		150
Max pressure in suction and return lines	bar	5		5
Pressure calibration in factory	bar	22 - 20		22 - 20

Tab. L

The time required for this operation depends upon the diameter and length of the suction tubing.
If the pump fails to prime at first start-up and the burner locks out, wait approx. 15 seconds, reset the burner, and then repeat the start-up operation.
And so on. After 5 or 6 starting operations allow 2 or 3 minutes for the transformer to cool.

Obscure the flame sensor, the burner should lock out anyway about 10 seconds after it starts.

WARNING

The a.m. operation is possible because the pump is already full of fuel when it leaves the factory. If the pump has been drained, fill it with fuel through the opening on the vacuometer 4)(Fig. 22) prior to starting; otherwise, the pump will seize.

Whenever the length of the suction piping exceeds 20-30 meters, the supply line must be filled using a separate pump.

5.13 Gas feeding

Explosion danger due to fuel leaks in the presence of a flammable source.

Precautions: avoid knocking, attrition, sparks and heat.

Make sure the fuel interception tap is closed before performing any operation on the burner.

WARNING

The fuel supply line must be installed by qualified personnel, in compliance with current standards and laws.

5.13.1 Gas feeding line

Key (Fig. 23 - Fig. 24 - Fig. 25 - Fig. 26)

1 Gas input pipe
2 Manual valve
3 Vibration damping joint
4 Pressure gauge with push-button cock
5 Filter
6A Includes:
- filter
- working valve
- safety valve
- pressure adjuster

6B Includes
- working valve
- safety valve
- pressure adjuster

6C Includes
- safety valve
- working valve

6D Includes:
- safety valve
- working valve

7 Minimum gas pressure switch
8 Leak detection control, provided as an accessory or integrated, based on the gas train code (see manual Burner - gas train combination" supplied as standard). In compliance with the EN 676 standard, the leak detection control is compulsory for burners with maximum outputs over 1200 kW.
9 Gasket, for "flanged" versions only
10 Pressure adjuster
11 Train-Burner adaptor, supplied separately
P2 Upstream pressure of valves/adjuster
P3 Upstream pressure of the filter
L Gas train, supplied separately
L1 The responsibility of the installer

MBC "threaded"

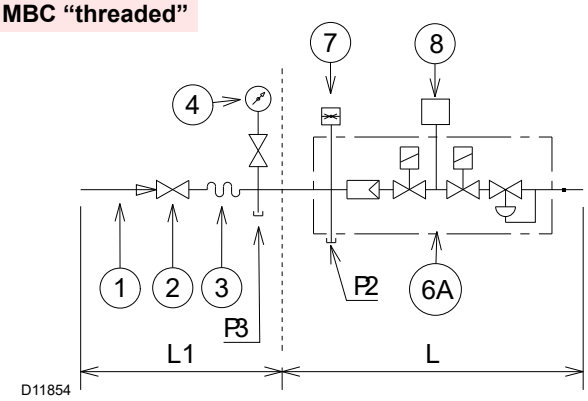

Fig. 23

MBC "flanged"

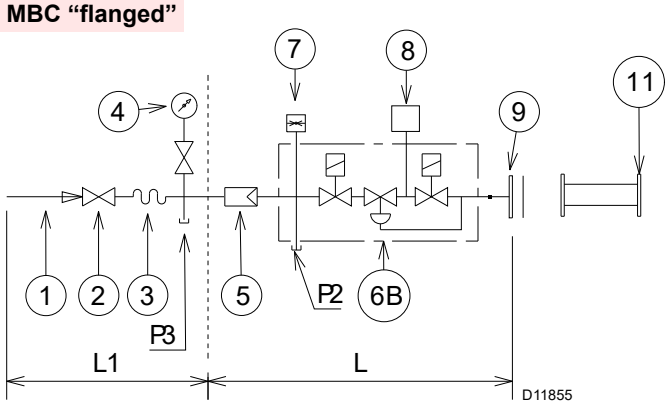

Fig. 24

DMV "flanged or threaded"

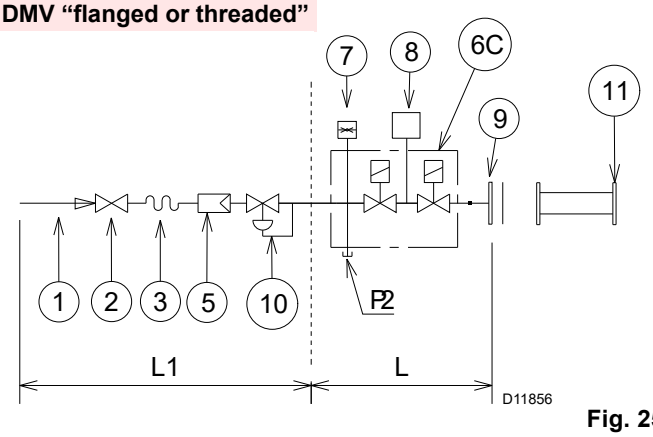

Fig. 25

CB "flanged or threaded"

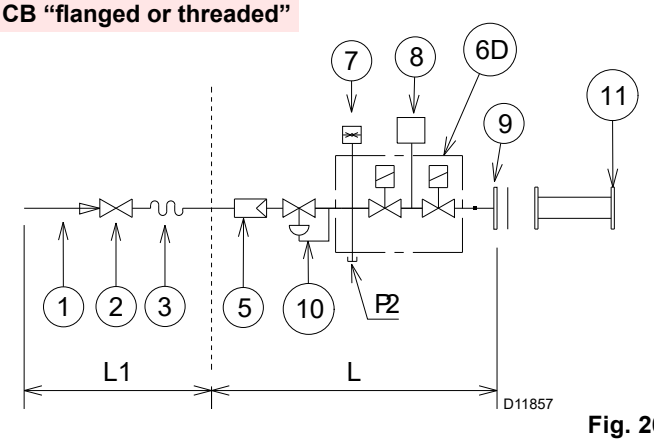

Fig. 26

5.13.2 Gas train

Approved according to standard EN 676 and provided separately from the burner.

To select the correct gas train model, refer to the supplied “Burner-gas train combination” manual.

5.13.3 Gas train installation

Disconnect the electrical power using the main switch.

Check that there are no gas leaks.

Pay attention when handling the train: danger of crushing of limbs.

Make sure that the gas train is properly installed by checking for any fuel leaks.

The operator must use the required equipment during installation.

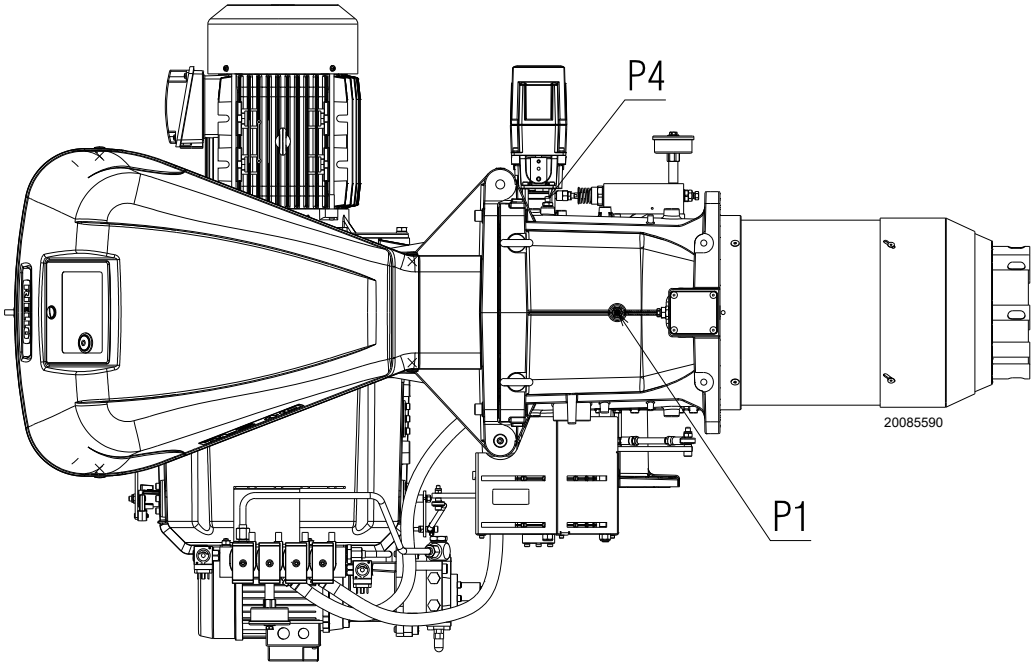

Fig. 27

5.13.4 Gas pressure

Tab. M indicates the minimum pressure drops along the gas supply line, depending on the maximum burner output.

The values shown in Tab. M refer to:
– Natural gas G 20 NCV 9.45 kWh/Sm^3 (8.2 Mcal/Sm^3)
– Natural gas G 25 NCV 8.13 kWh/Sm^3 (7.0 Mcal/Sm^3)

Column 1

Combustion head pressure drop.
Gas pressure measured at the test point P1)(Fig. 27), with:
- Combustion chamber at 0 mbar;
- Burner working at maximum output;
- Combustion head adjusted as in page 21.

Column 2

Pressure loss at gas butterfly valve 14)(Fig. 5 on page 14) with maximum opening: 90°.

Calculate the approximate maximum output of the burner in this way:
– subtract the combustion chamber pressure from the gas pressure measured at test point P1)(Fig. 27).
– Find, in the table Tab. M related to the burner concerned, the pressure value closest to the result of the subtraction.
– Read the corresponding output on the left.

Example RLS 410/M MX with natural gas G20:
Maximum output operation
Gas pressure at test point P1)(Fig. 27) = 29,4 mbar
Pressure in combustion chamber = 5 mbar
29.4 - 5 = 24.4 mbar

A pressure of 24.4 mbar, column 1, corresponds in the table Tab. M to an output of 3000 kW.

This value serves as a rough guide; the effective output must be measured at the gas meter.

To calculate the required gas pressure at test point P1)(Fig. 27), set the MAX output required from the burner operation:
– find the nearest output value in the table Tab. M for the burner in question.
– Read, on the right (column 1), the pressure at the test point P1)(Fig. 27).
– Add this value to the estimated pressure in the combustion chamber.

Example RLS 410/M MX with natural gas G20:
Required burner maximum output operation: 3000 kW
Gas pressure at an output of 3000 kW = 24.4 mbar
Pressure in combustion chamber = 5 mbar
24.4 + 5 = 29.4 mbar
Pressure required at test point P1)(Fig. 27).

	kW	1 Δp (mbar)		2 Δp (mbar)	
		G 20	G 25	G 20	G 25
RLS 310/M MX	1200	3.6	5.4	0.1	0.1
	1467	5.4	8.1	0.2	0.3
	1733	7.5	11.2	0.4	0.6
	2000	9.9	14.8	0.7	1.0
	2267	12.7	18.9	1.0	1.5
	2533	15.8	23.6	1.3	1.9
	2800	19.3	28.8	1.7	2.5
	3067	23.1	34.5	2.1	3.1
	3333	27.3	40.7	2.6	3.9
	3600	31.8	47.4	3.1	4.6
RLS 410/M MX	1500	6.4	9.5	0	0
	1800	9.0	13.4	0.2	0.3
	2100	12.2	18.2	0.5	0.7
	2400	15.8	23.6	0.8	1.2
	2700	19.9	29.7	1.2	1.8
	3000	24.4	36.4	1.7	2.5
	3300	29.4	43.9	2.3	3.4
	3600	34.9	52.1	2.9	4.3
	3900	40.9	61.0	3.6	5.4
	4200	47.3	70.6	4.4	6.6
RLS 510/M MX	1800	7.0	10.4	1.5	2.2
	2174	9.8	14.6	2.0	3.0
	2549	13.0	19.4	2.6	3.9
	2923	16.6	24.8	3.3	4.9
	3298	20.7	30.9	4.1	6.1
	3672	25.2	37.6	4.9	7.3
	4047	30.2	45.1	5.8	8.7
	4421	35.6	53.1	6.8	10.1
	4796	41.5	61.9	7.8	11.6
	5170	47.8	71.3	9.0	13.4
RLS 610/M MX	2200	8.7	13.0	2.7	4.0
	2639	12.5	18.6	3.9	5.8
	3079	17.1	25.5	5.3	7.9
	3518	22.3	33.3	6.9	10.3
	3958	28.2	42.1	8.7	13.0
	4397	34.8	51.9	10.7	16.0
	4837	42.1	62.8	13.0	19.4
	5276	50.1	74.7	15.4	23.0
	5716	58.8	87.7	18.1	27.0
	6155	68.2	101.8	21.0	31.3

Tab. M

5.14 Electrical wiring

Notes on safety for the electrical wiring

DANGER

- The electrical wiring must be carried out with the electrical supply disconnected.
- Electrical wiring must be made in accordance with the regulations currently in force in the country of destination and by qualified personnel. Refer to the wiring diagrams.
- The manufacturer declines all responsibility for modifications or connections different from those shown in the wiring diagrams.
- Check that the electrical supply of the burner corresponds to that shown on the identification label and in this manual.
- **The FS1 burners** have been set for intermittent operation. This means that the burner should compulsorily be stopped at least once every 24 hours to enable the electric control box to check its own safety and efficiency at start-up. Normally, burner stopping is guaranteed by the boiler's thermostat/pressure switch. If this is not the case, a time switch should be fitted in series to TL to stop the FS1 burner at least once every 24 hours. Refer to the wiring diagrams.
- The electrical safety of the device is obtained only when it is correctly connected to an efficient earthing system, made according to current standards. It is necessary to check this fundamental safety requirement. In the event of doubt, have the electrical system checked by qualified personnel. Do not use the gas tubes as an earthing system for electrical devices.
- The electrical system must be suitable for the maximum power absorption of the device, as indicated on the label and in the manual, checking in particular that the section of the cables is suitable for that level of power absorption.
- For the main power supply of the device from the electricity mains:
  - do not use adapters, multiple sockets or extensions;
  - make provisions for an omnipolar switch with a gap between the contacts of at least 3 mm (over-voltage category III), as required by current safety regulations.
- Do not touch the device with wet or damp body parts and/or in bare feet.
- Do not pull the electric cables.

Before carrying out any maintenance, cleaning or checking operations:

DANGER

Turn off the burner's power supply using the main system switch.

DANGER

Turn off the fuel interception tap.

DANGER

Avoid condensate, ice and water leaks from forming.

If the cover is still present, remove it and proceed with the electrical wiring according to the wiring diagrams. Use flexible cables in compliance with the EN 60 335-1 standard.

5.14.1 Supply cables and external connections passage

All the cables to be connected to the burner must be threaded through cable grommets. The use of the cable grommets can take various forms; by way of example see Fig. 28.

Key (Fig. 28)

1	Electrical supply	Bore for M32
2	Consents / Safety devices	Bore for M20
3	Minimum gas pressure switch	Bore for M20
4	VPS gas valve leak detection control kit	Bore for M20
5	Gas train	Bore for M20
6	Available	Bore for M20
7	Available	Bore for M16

Cable grommets used in the factory:

A Fan motor
B Maximum gas pressure switch
C Air/gas servomotor
D Flame sensor
E Oil valve
F Pump motor
G Oil pressure switches

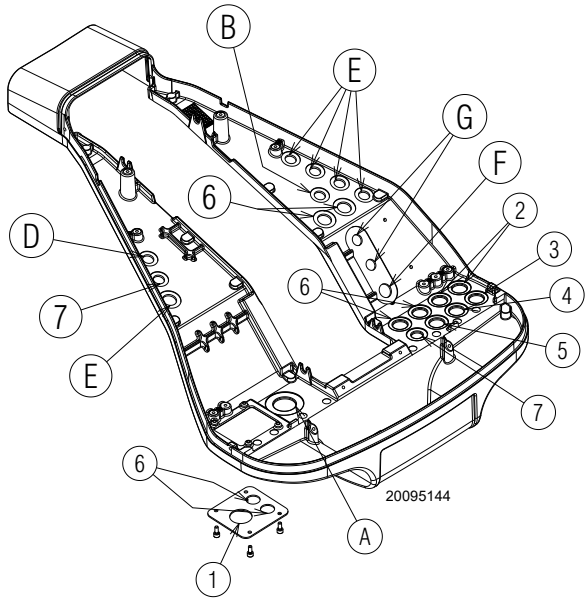

Fig. 28

After carrying out maintenance, cleaning or checking operations, reassemble the cover and all the safety and protection devices of the burner.

6 Start-up, calibration and operation of the burner

6.1 Notes on safety for the first start-up

WARNING

➤ The first start-up of the burner must be carried out by qualified personnel, as indicated in this manual and in compliance with the standards and regulations of the laws in force.

WARNING

➤ Check the correct working of the adjustment, command and safety devices.

6.2 Servomotor adjustment

The servomotor (Fig. 29) provides simultaneous adjustment of the eccentric of the oil modulator, and by means of the adjustable profile cam the gas butterfly valve. and the air damper. Completes a rotation of 90° in 30 s. After the adjustment made in the factory to its 6 cams to allow an initial ignition.

Check that they are as shown below.

In the event of a modification, follow what is described below for each cam:

Cam I **(RED): 135°** (The same for all models)
Limits the rotation towards the maximum.

DANGER

Do not make any adjustments.

Cam II **(BLUE): 0°** (The same for all models)
Limits the rotation towards the minimum.
With the burner off the air damper
and the gas butterfly valve should be closed: 0°

WARNING

It is recommended that no adjustments are made.

Cam III **(ORANGE): 50°** (The same for all models)
Adjusts the start up position and the minimum output with gas operation.

Cam IV **(YELLOW): 130°** (The same for all models)
Adjusts the position of the maximum output with gas operation.

Cam V **(BLACK): 25°** (The same for all models)
Adjusts the minimum output and ignition position with light oil operation.

Cam VI **(GREEN): 130°** (The same for all models)
adjusts the Max. output position with light oil operation.

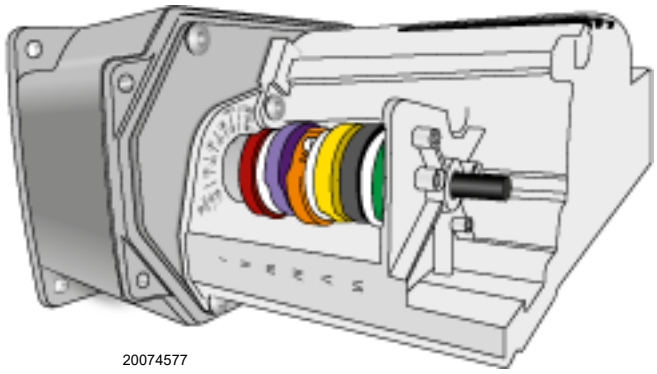

20074577

Fig. 29

6.3 Adjustments prior to ignition (light oil)

WARNING

It is recommended to adjust first the light oil burner and then the gas burner.

Carry out the fuel change with burner off.

The optimum calibration of the burner requires an analysis of the flue gases at the boiler outlet and interventions on the following points.

6.3.1 Nozzle

See information on page 22.

6.3.2 Combustion head

The adjustment of the combustion head already carried out on page 21 does not require any modifications unless the burner output is changed.

6.3.3 Pump pressure

In order to change pump pressure, act on screw 5) (Fig. 22).
See information on page 22.

6.3.4 Fan damper

Refer to the adjustment of the servomotor on page 29.

6.4 Burner start-up (light oil)

Electrically power the burner using the disconnecting switch on the boiler panel.
Position the selector 23)(Fig. 6 on page 15) on “**OIL**” to select light oil as fuel.

Close the thermostats/pressure switches and set the switch 1)(Fig. 30) to **MAN**.

Start of the fan motor. As the burner is not fitted with a device to check the sequence of the phases, the motor rotation may be incorrect.

As soon as the burner starts to position itself in front of the cooling fan of the fan motor, check that this turns anti-clockwise or else in the direction of the arrow 25)(Fig. 5).

If this is not the case:

➤ place the switch 1)(Fig. 30) to “**OFF**” and wait for the control box to carry out the switching off phase;

DANGER

disconnect the burner's electrical supply, since this operation should be carried out when there is no electrical supply;

➤ invert the phases on the three-phase power supply;

➤ repeat the start-up procedure.

WARNING

Make sure that the lights or testers connected to the solenoids, or the pilot lights on the solenoids themselves, indicate that no voltage is present. If voltage is present, stop the burner **immediately** and check the electrical wiring.

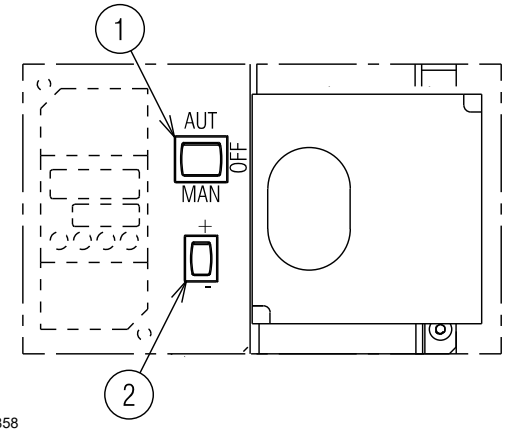

20078858

Fig. 30

6.5 Burner ignition (light oil)

Position the selector 1)(Fig. 30) on “**MAN**”.

Position the selector 23)(Fig. 6 on page 15) on “**OIL**” to select light oil as fuel.

At the closing of the limit thermostat (TL), you must start the burner.

At first ignition, there is a momentary drop in fuel pressure due to the filling of the nozzle piping. This lowering of the fuel pressure can cause the burner to lockout and can sometimes give rise to pulsations.

If the burner locks out again, see the chapter see “Faults - Possible causes - Solutions” on page 44.

Once the following adjustments have been made, the ignition of the burner must generate a noise similar to the noise generated during operation.

6.6 Pressure variator

Calibration pressure on return line

With the servomotor in the minimum output position, the nut and the corresponding lock nut 2)(Fig. 31), should be secured against the eccentric 3).

With the servomotor at its maximum opening, the eccentric will press the modulator spindle bringing the pressure, which can be read on the pressure gauge 1)(Fig. 31), to the desired value (maximum output).

With the servomotors in the position of maximum output, it is possible to reduce the pressure on the return line by using the screw 4.

By turning the screw clockwise the pressure on the return line drops (the pressure at the nozzle increases), turning it the other way the pressure on the return line increases (the pressure at the nozzle drops).

Once the calibration is finished lock the lock nut 5)(Fig. 31).

Calibration pressure on delivery line

To adjust the delivery pressure, operate on the pump as described on page 24.

Example:

if you use a 450 kg/h nozzle and you want to obtain an output of 4550 kW, the pressure on the pressure gauge 1)(Fig. 31) (maximum pressure on the return circuit) must be about 14 bar.

The relative delivery pressure on the pressure gauge 1), must be 20 bar (see Tab. K on page 22).

IMPORTANT

- ➤ For a correct calibration, the eccentric 3) must operate along the entire range of travel of the servomotor (20 - 130°): a pressure variation must correspond to every variation of the servomotor.
- ➤ Never take the piston of the variator to the end.
- ➤ If at the maximum delivery of the nozzle (maximum pressure on the return line) pressure oscillations can be seen on the pressure gauge 3), slightly reduce the pressure until they disappear.

NOTE:

The burner is factory set with maximum pressure on the return line of approximately 14 bar and delivery pressure of approximately 25 bar.

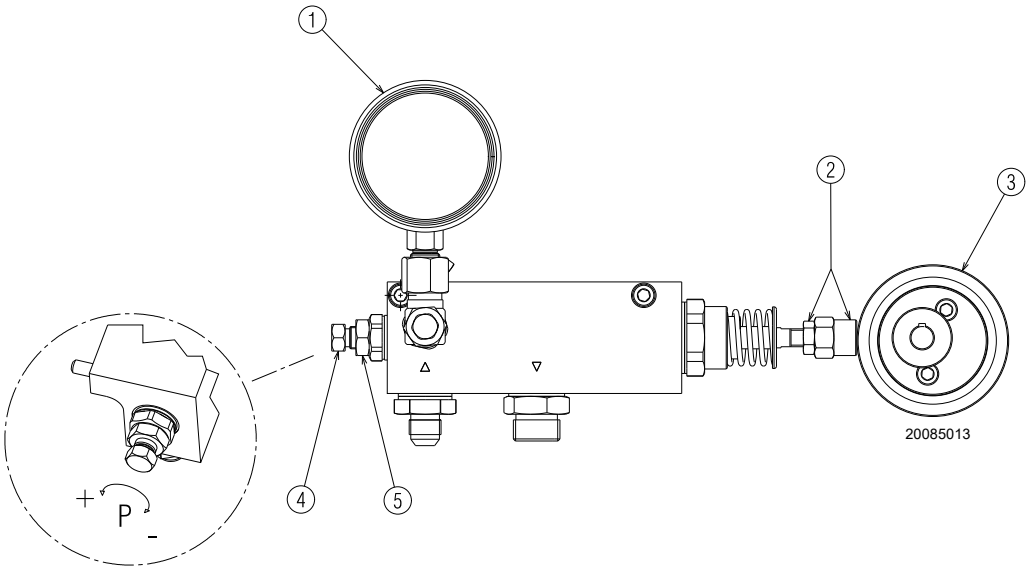

Fig. 31

Key (Fig. 31)

1 Return pressure gauge
2 Piston calibration nut and lock nut
3 Fixed eccentric
4 Adjustment screw (maximum output)
5 Locking screws (maximum output)

6.6.1 Light oil burner calibration procedure

➤ Switch on the burner, with the selector on the control panel on manual 1)(Fig. 30).
At this point, after the pre-purge operation, the servomotor stops at the ignition position.
➤ Adjust the minimum return pressure to approx. 6 bar.
To do this, the length of the spindle acting needs to be changed by using the nut 2)(Fig. 31).
➤ Proceed with calibrating the air output by adjusting the variable profile cam, using the screws 2)(Fig. 32)(cam 1 Fig. 34).
➤ Having performed this first adjustment, increase the output by means of automatic return selector 2)(Fig. 30) on the control panel. Pause after a 15° rotation of the servomotor and carry out another adjustment using the variable profile cam of the air (cam 1 Fig. 34).
It is recommended that a calibration be carried out that is sufficient not to create a smoky flame and that attains the maximum output as quickly as possible; using the screw 4)(Fig. 31) adjust the pressure on the return line to obtain the desired output required by the nozzle, then go back and calibrate the intermediate points.
➤ Then recheck the values of the combustion parameters at the various modulation outputs and if necessary make the necessary adjustments.
➤ With the optimal adjustment achieved, remember to lock the adjustment screws of the cam profiles by means of screws 3)(Fig. 32).

WARNING

When calibrating the cams, never go beyond the travel limits of the servomotor 0° - 130° to avoid any breakages. Carrying out a manual travel 0 - 90° of the cams, check that there are no mechanical stops before the micro-switches of the servomotor are activated.

6.6.2 Maximum output (light oil)

Adjust the servomotor to the maximum opening so that the air damper is fully open.
To regulate the light oil, use the screw 4)(Fig. 31) until the required output is obtained.

6.6.3 Minimum output (light oil)

Min output must be selected within the firing rate range shown on page 12.

6.6.4 Intermediate outputs

After adjusting the maximum and minimum output of the burner, carry out air adjustment on higher intermediate positions of the servomotor.

The passage from one position to the next one is obtained by pressing the selector 2)(Fig. 30) on the symbol (+) or (-).

For better adjustment repeatability, take care to stop the rotation of the cam unit when the upper bearing that slides on the profile 4)(Fig. 32) is aligned with one of the adjustment screws 2)(Fig. 32).

Screw in or unscrew the pre-set screw 2)(Fig. 32) to increase or decrease the air output so that it comes into line with the corresponding light oil output.

After the output adjustments (maximum, minimum and intermediate), it is important to lock all the air adjustment screws 2)(Fig. 32) using the locking screws 3)(Fig. 32) so as to avoid possible movements from the of air - light oil calibration positions.

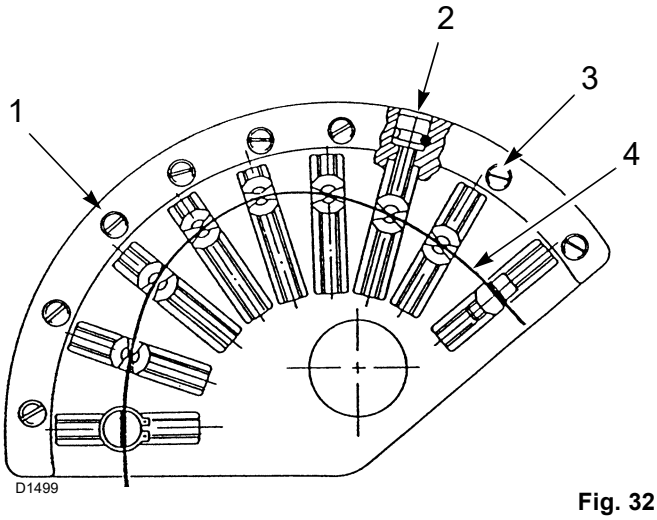

Fig. 32

Key (Fig. 32)
1 Cam
2 Adjustment screws
3 Locking screws
4 Adjustable profile

6.7 Change of fuel

There are two change of fuel options:
1 with selector 23)(Fig. 6 on page 15);
2 with a remote selector connected to the main terminal board. Positioning the selector 23)(Fig. 6 on page 15) to "**EXT**" activates the remote selection of the fuel.

WARNING

Change the fuel only when the burner is off.

WARNING

For the remote switching of the fuel, use the relative kit.

6.8 Adjustments prior to ignition (gas)

Combustion head adjustment is already described on page 21.

In addition, the following adjustments must also be made:

- ➤ Open manual valves upstream from the gas train.
- ➤ Adjust the minimum gas pressure switch to the start of the scale.
- ➤ Adjust the maximum gas pressure switch to the end of the scale.
- ➤ If necessary, adjust the air pressure switch (previously adjusted when operating with light oil).
- ➤ Purge the air from the gas line.
  We recommend using a plastic tube routed outside the building and to purge air until gas is smelt.
- ➤ Fit a U-type pressure gauge or a differential pressure gauge (Fig. 33), with socket (+) on the gas pressure of the pipe coupling and (-) in the combustion chamber.
  The manometer readings are used to calculate MAX burner output using the Tab. M.
- ➤ Connect two lamps or testers to the two gas line solenoids to check the exact moment in which voltage is supplied. This operation is unnecessary if each of the two solenoids is equipped with a pilot light that signals voltage passing through.

CAUTION

Before starting up the burner, it is good practice to adjust the gas train so that ignition takes place in conditions of maximum safety, i.e. with gas delivery at the minimum.

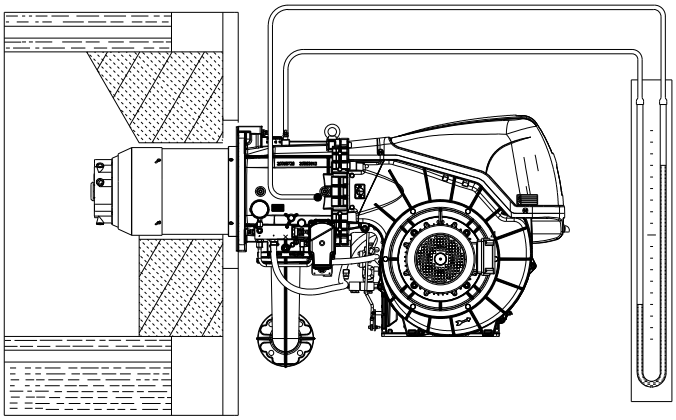

20085591

Fig. 33

6.9 Burner ignition (gas)

Electrically power the burner using the disconnecting switch on the boiler panel.
Put the selector Fig. 6) on “**GAS**” to select gas as the fuel.

The burner should light after having performed the above steps.

If the motor starts up, but the flame does not appear and the control box goes into lockout, reset it and wait for a new ignition attempt.

Two types of burner failure may occur:

- ➤ **Control box lockout**: when the control box button comes on (light signal) 2)(Fig. 6 on page 15) it warns you that the burner is in lockout. See “Faults - Possible causes - Solutions” on page 44 for the causes of the lockout. release by pressing the push-button 2)(Fig. 6 on page 15). See control box reset.
- ➤ **Motor lockout because of thermal relay intervention**: because of an erroneous calibration of the thermal relay or problems with the motor or the main power supply. Release by pressing the button on thermal relay, see section 4.15 on page 17.

If ignition is still not achieved, it may be that gas is not reaching the combustion head within the safety time period of 3 seconds. In this case increase gas ignition delivery.

The arrival of gas at the pipe coupling is indicated by the U-type pressure gauge (Fig. 33).
Once the burner has fired, now proceed with global calibration operations.

6.10 Proceed with the calibration (gas)

The fuel/combustion synchronisation is done by means of a servomotor connected to two variable profile cams, which act on the air dampers 1)(Fig. 34) and gas dampers 2)(Fig. 34).
It is advisable, to reduce the loss and for a wide calibration field, to adjust the servomotor to the maximum of the output used, the nearest possible to the maximum opening (130°).
On the gas butterfly valve, the choking of the fuel according to the required output, is carried out using the cam 2)(Fig. 34).

The values in the table can be useful as reference for good fuel calibration.

EN 676		Air excess		
		Max. output. $\lambda \leq 1.2$		Min. output $\lambda \leq 1.3$
GAS	Theoretical max CO_2 0 % O_2	CO_2 % Calibration		CO mg/kWh
		$\lambda = 1.2$	$\lambda = 1.3$	
G 20	11.7	9.7	9.0	≤ 100
G 25	11.5	9.5	8.8	≤ 100
G 30	14.0	11.6	10.7	≤ 100
G 31	13.7	11.4	10.5	≤ 100

EN 267	Air excess		
	Max. output. $\lambda \leq 1.2$		Min. output $\lambda \leq 1.3$
Theoretical max CO_2 0 % O_2	CO_2 % Calibration		CO mg/kWh
	$\lambda = 1.2$	$\lambda = 1.3$	
15.2	12.6	11.5	≤ 100

6.10.1 Burner adjustment

The optimum adjustment of the burner requires an analysis of flue gases at the boiler outlet.

Adjust in sequence:
1 - Output upon ignition
2 - MAX output
3 - MIN output
4 - Intermediate outputs between Min. and Max.
5 - Air pressure switch
6 - Maximum gas pressure switch
7 - Minimum gas pressure switch

6.10.2 Output upon ignition

Ignition must occur at a lower output than the max. operation output. Regulations provide that the ignition output of this burner must be equal to or less than 1/3 of the MAX operation output.

Example: MAX operation output of 600 kW.

Ignition output must be equal to or lower than:

200 kW with ts = 3 s.

In order to measure the ignition output:
- ➤ Obscure the flame sensor (the burner starts and goes into lockout after the safety time).
- ➤ Perform 10 ignitions with consecutive lockouts.
- ➤ Read the quantity of gas burned on the meter.
- ➤ This quantity must be equal to or lower than the quantity given by the formula:

$$\frac{\text{Sm}^3/\text{h} \text{ (max. burner delivery)}}{360}$$

Example for G 20 gas (9.45 kWh/Sm^3):

Max. operation output: 600 kW corresponding to 63.5 Sm^3/h.

After 10 ignitions with their lockouts, the delivery indicated on the meter must be equal to or less than: 63.5 : 360 = 0.176 Sm^3

Air adjustment

The air adjustment has already been carried out on the basis of the light oil side calibration.
There could be variations to correct the gas combustion but this involves a further check of the light oil operation.

6.10.3 Maximum output

The MAX output must be set within the firing rate indicated in Fig. 3 on page 12.

In the above instructions we left the burner running at the MIN output. Now press the “increase output” button 2)(Fig. 30 on page 30), and keep it pressed until the servomotor has opened the air damper and the gas butterfly valve.

Adjustment of gas delivery

Measure the gas delivery on the gas meter.

A rough indication can be obtained from Tab. M on page 27, just read the gas pressure on the “U” pressure gauge (see Fig. 33 on page 33) and follow the indications.
- ➤ If delivery needs to be reduced, diminish outlet gas pressure; if it is already very low, slightly close the VR adjustment valve.
- ➤ If delivery needs to be increased, increase the adjuster outlet gas pressure.
- ➤ Screw or unscrew the screw 2) of the mechanical cam (Fig. 34 on page 34) to increase or decrease the gas output so as to adjust it to the corresponding air output, to obtain optimal combustion.
- ➤ Proceed in the same way with the other screws.

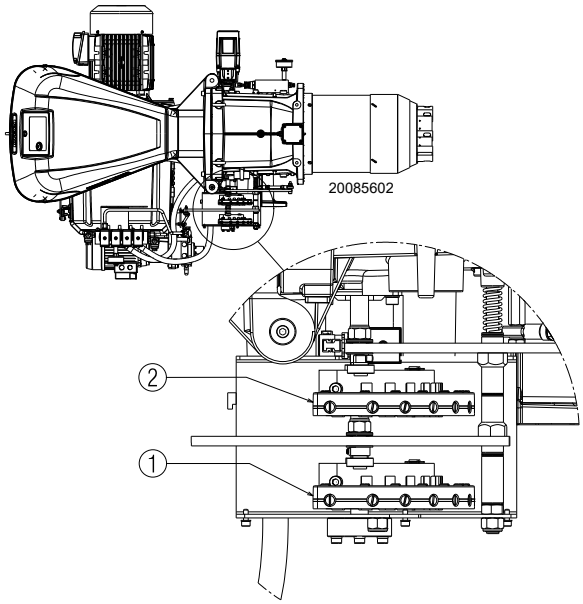

Fig. 34

Key (Fig. 34)
1 Air adjustment cam
2 Gas adjustment cam

Air adjustment

The regulation of the air is carried out by changing the angle of the cam I) and IV) of the servomotor Fig. 29 and using the selector 2)(Fig. 30 on page 30).

To adjust the cam of the servomotor, see Fig. 35 A).

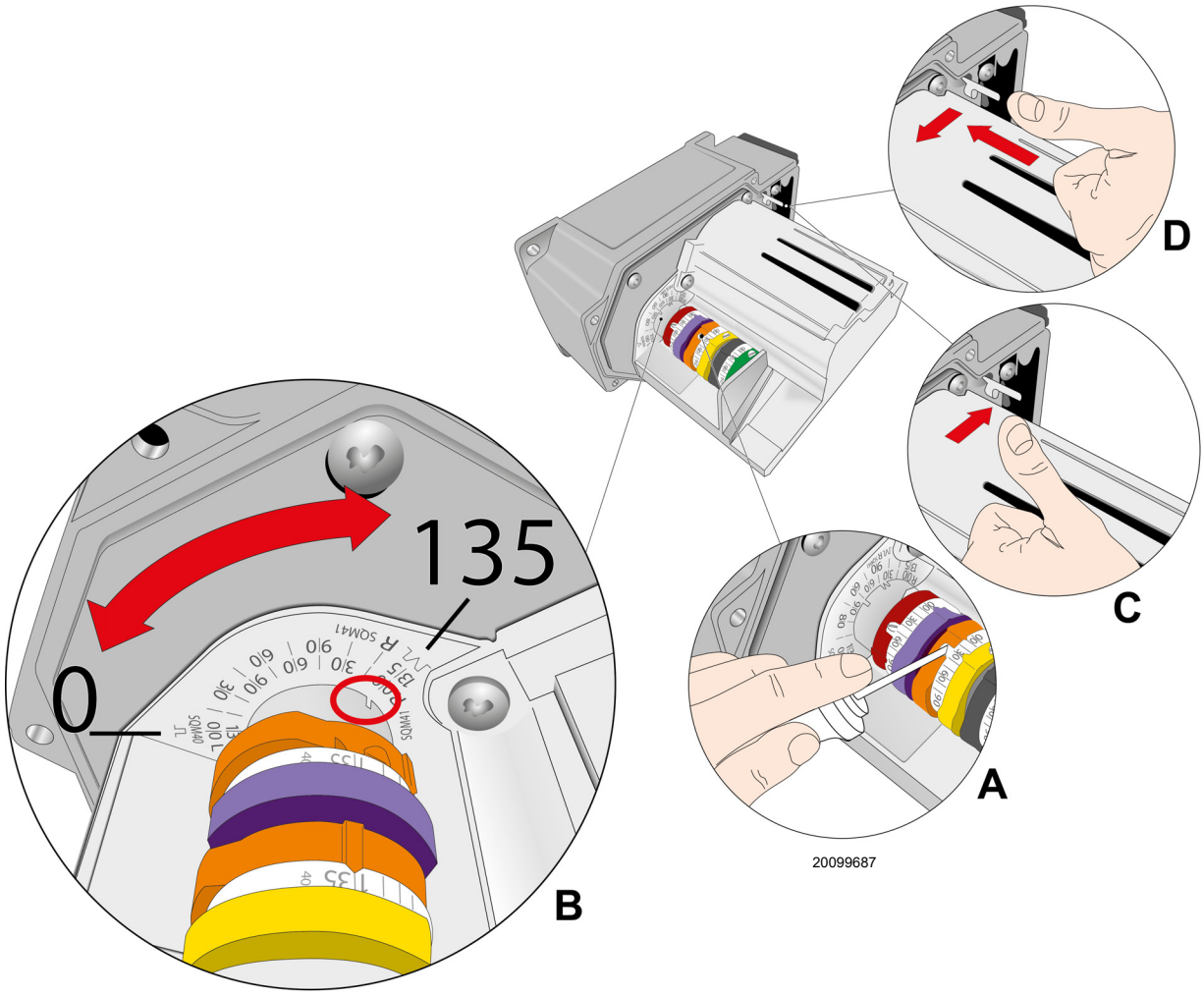

Fig. 35

6.10.4 Minimum output

Min output must be selected within the firing rate range shown on Fig. 3 on page 12.

Press the button 2)(Fig. 30) “Decreasing output” and keep it pressed until the servomotor comes to the minimum position.

Adjustment of gas delivery

Progressively adjust the initial profile of the mechanical cam 2) Fig. 34, using the screws 2) Fig. 34.

For example, calibrate the minimum output to 800 kW, check the emissions and if necessary increase or decrease the opening of the air damper (see “Proceed with the calibration (gas)” on page 34). Bring the output to 800 kW using the screws 2) of the mechanical cam (Fig. 32 on page 32) and check the emissions.

Air adjustment

The regulation of the air is carried out by varying the angle of the cam III) of the servomotor Fig. 29 and by using the selector 2)(Fig. 30 on page 30). To adjust the cam of the servomotor, see Fig. 35 A).

NOTE:

The servomotor follows the adjustment of cam III only when the angle of the cam is reduced. If it is necessary to increase the angle of the cam, you must first increase the angle of the servomotor by means of the “output increase” key, then increase the angle of cam III, and finally bring the servomotor to the position of MIN output, with the “Output reduction” key.

To adjust the cam III) Fig. 29, see Fig. 35 A) and B).

6.10.5 Intermediate outputs

Adjustment of gas delivery

After adjusting the maximum and minimum output of the burner, carry out air adjustment on higher intermediate positions of the servomotor. The passage from one position to the next one is obtained by pressing the button 2) on the symbol (+) or (-) (Fig. 30 on page 30). Lightly push the button 2)(Fig. 30 on page 30) “Increasing the output” so that the servomotor turns by about 20°.

Screw or unscrew the screw 2) of the mechanical cam (Fig. 32 on page 32) to increase or decrease the gas output so as to adjust it to the corresponding air output, to obtain optimal combustion.

Proceed in the same way with the other screws.

WARNING

Take care that the cam profile variation is progressive.

Switch off the burner using the switch 1)(Fig. 30), OFF position, release the mechanical cam I) and II)(Fig. 32)(Fig. 34) to separate the gears of the servomotor, pressing and shifting downwards the button 3)(Fig. 35 D) and by manually turning several times the mechanical cam I)(Fig. 32) backwards and forwards check that the movement is smooth and without any hindrance.

WARNING

We recommend binding the mechanical cams I) and II) again (Fig. 32)(Fig. 34) to the servomotor by shifting upwards the button 3)(Fig. 35 C).

As far as is possible, try not to move those screws at the ends of the mechanical cam that were previously adjusted for the opening of the gas butterfly valve to MAX and MIN output.

6.11 Pressure switch adjustment

6.11.1 Air pressure switch - check CO

Adjust the air pressure switch after performing all other burner adjustments with the air pressure switch set to the start of the scale (Fig. 36).

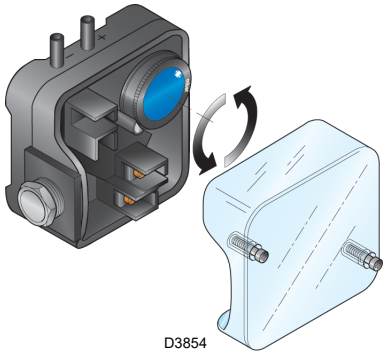

Fig. 36

With the burner operating at min. output, increase adjustment pressure by slowly turning the relative knob clockwise until the burner locks out.
Then turn the knob anti-clockwise by about 20% of the set point and repeat burner starting to ensure it is correct.
If the burner locks out again, turn the knob anticlockwise a little bit more.

WARNING

In conformity with the standard, the air pressure switch must prevent the air pressure falling below 80% of the adjusted value and the CO in the flue gases exceeding 1% (10,000 ppm).
To check this, insert a combustion analyser into the chimney, slowly close the fan suction inlet (for example with cardboard) and check that the burner locks out before the CO in the fumes exceeds 1%.

The air pressure switch is installed in the “absolute” position, that is connected only to the pressure test point “+” 22)(Fig. 5).

6.11.2 Maximum gas pressure switch

Adjust the maximum gas pressure switch after having performed all the other burner adjustments with the maximum gas pressure switch set at the end of the scale (Fig. 37).

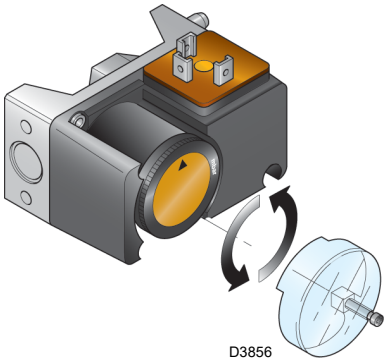

Fig. 37

With the burner operating at maximum output, lower the adjustment pressure by slowly turning the relative knob anticlockwise until the burner locks out.
Now turn the knob clockwise by 0.2 kPa (2 mbar) and repeat the start-up of the burner.
If the burner locks out again, turn the knob clockwise again by 0.1 kPa (1 mbar).

6.11.3 Minimum gas pressure switch

Adjust the minimum gas pressure switch after performing all the other burner adjustments with the pressure switch set to the start of the scale (Fig. 38).

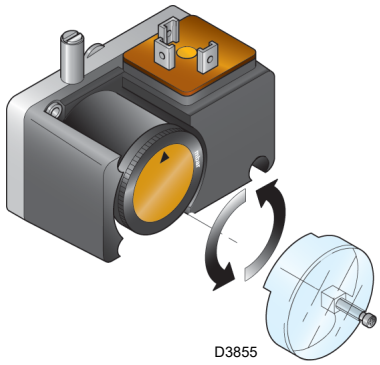

Fig. 38

With the burner operating at maximum output, increase the adjustment pressure by slowly turning the relative knob clockwise until the burner stops.
Now turn the knob anticlockwise by 0.2 kPa (2 mbar) and repeat burner start-up to ensure it is uniform.
If the burner locks out again, turn the knob anticlockwise again by 0.1 kPa (1 mbar).

6.11.4 Minimum oil pressure switch

The minimum oil pressure switch (Fig. 39) is calibrated in the factory at 18 bar. If the oil pressure falls below this value in the delivery line, the pressure switch stops the burner.

The burner restarts automatically if the pressure goes above bar value set after the burner starts.

6.11.5 Maximum oil pressure switch

The maximum oil pressure switch (Fig. 39) is calibrated in the factory at 3 bar. If the oil pressure in the return line goes above this value, the pressure switch stops the burner in a lockout.

To adjust the pressure switches, use a tool to operate the adjustment screw, see (Fig. 39).

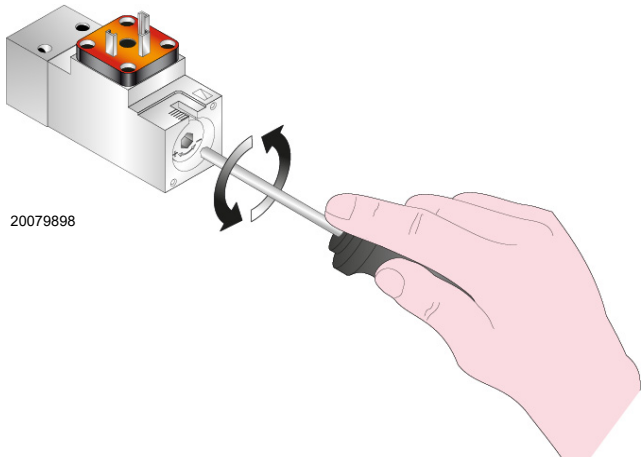

Fig. 39

WARNING

1 kPa = 10 mbar

6.12 Operation sequence of the burner (gas)

6.12.1 Burner start-up

T0	**0s**	TL thermostat/pressure switch closure.
T1	**06**	Fan motor start. Servomotor starts: turn to the right until the intervention of the contact on the cam 4)
T2	**38s**	The air damper is positioned to MAX output.
T2	**38s**	Pre-purging phase with air delivery of the MAX output. Duration 32 seconds.
T3	**70s**	The servomotor rotates left up to the angle set on the cam 3).
T4	**102s**	The air damper and the gas butterfly valve set to MIN output (with cam 3).
T5	**103s**	Ignition electrode strikes a spark.
T6	**109s**	The VS safety valve and the VR adjustment valve open (rapid opening). The flame is ignited at a low output level, point A (Fig. 40). There follows a progressive increase of the input, slow opening of the valve, up to the MIN output, point B (Fig. 40).
T7	**112s**	The spark goes out.
T8	**133s**	The starting cycle of the electrical equipment ends.

6.12.2 Operation

Burner without the RWF ... output power regulator
Once the starting cycle is completed, the servomotor command moves on to the TR thermostat/pressure switch that controls the pressure or the temperature in the boiler, point C (Fig. 40).
(The electrical control box continues to check the presence of the flame and the correct position of the air and gas maximum pressure switches).

– If the temperature or the pressure is low so the thermostat/ pressure switch TR is closed, the burner progressively increases the output up to the MAX value (section C-D).
– If subsequently the temperature or pressure increases until TR opens, the burner progressively decreases its output to the MIN value (section E-F). The sequence repeats endlessly.
– The burner locks out when the heat request is less than the heat supplied by the burner at MIN output, (section G-H). The TL thermostat/pressure switch opens, and the servomotor returns to angle 0° limited by the contact of cam 2). The air damper closes completely to reduce heat losses to a minimum.

With each change of output, the servomotor automatically modifies the gas output (butterfly valve) and the air flow rate (fan damper).

Burner with the RWF ... output power regulator
See manual enclosed with the adjuster.

6.12.3 Burner flame goes out during operation

If the flame should accidentally go out during operation, the burner will lock out within 1s.

Normal ignition
(no. = seconds from instant 0)

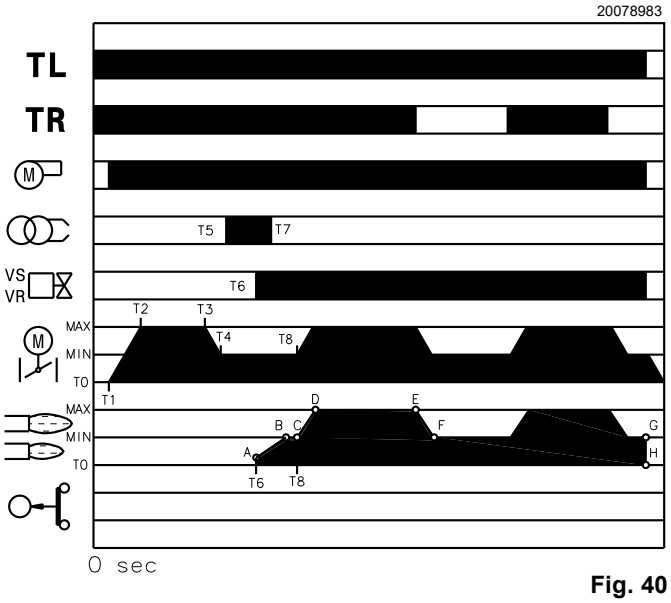

Fig. 40

Ignition failure

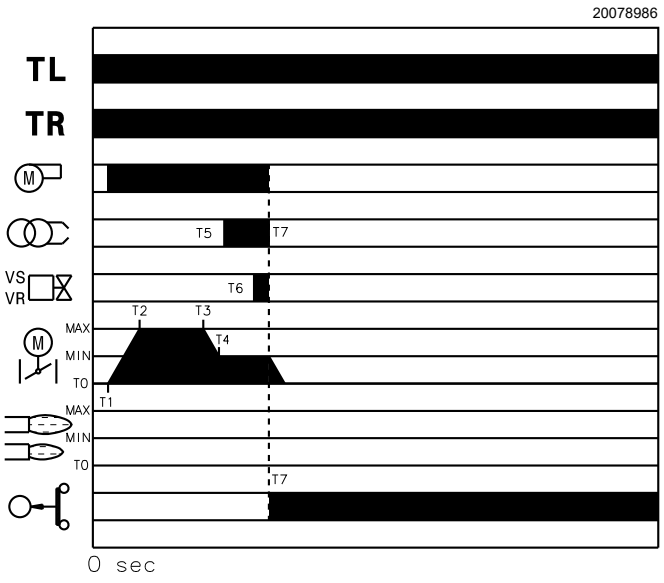

Fig. 41

6.12.4 Ignition failure

If the burner does not fire (Fig. 41), it goes into lockout within 3 sec. after the gas valve opens and 122 seconds after the control device TL closes.

6.12.5 Control box reset

To carry out the control box reset, proceed as follows:
➤ Press the reset button 2)(Fig. 5 on page 14).

6.13 Operation sequence of the burner (light oil)

6.13.1 Burner start-up

T0	**0s**	TL thermostat/pressure switch closure.
T1	**06**	Fan motor start. Pump motor start. Servomotor starts: rotates 90° towards the right, i.e. until the intervention of the contact on the cam 6)
T2	**38s**	The air damper is positioned to MAX output.
T2	**38s**	Pre-purging phase with air delivery of the MAX output. Duration 32 seconds.
T3	**70s**	The servomotor rotates left up to the angle set on the cam 4).
T4	**102s**	The air damper and the light oil eccentric set to MIN output (with cam 4).
T5	**103s**	Ignition electrode strikes a spark.
T6	**109s**	The oil valves open. The flame is ignited at a low output level, to the MIN output, point A (Fig. 42).
T7	**112s**	The spark goes out.
T8	**133s**	The starting cycle of the electrical equipment ends.

Normal ignition
(no. = seconds from instant 0)

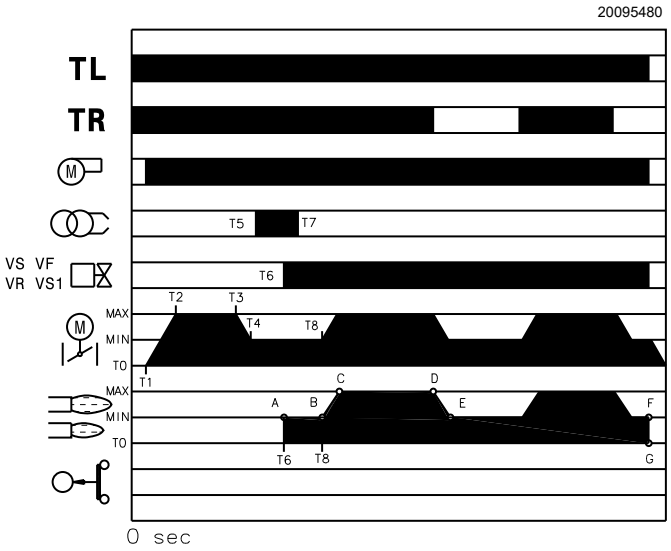

Fig. 42

6.13.2 Operation

Burner without the RWF ... output power regulator
Once the starting cycle is completed, the servomotor command moves on to the TR thermostat/pressure switch that controls the pressure or the temperature in the boiler, point B (Fig. 42).
(The electrical control box continues to check the presence of the flame and the correct position of the air and gas maximum pressure switches).

- If the temperature or the pressure is low so the thermostat/ pressure switch TR is closed, the burner progressively increases the output up to the MAX value (section B-C).
- If subsequently the temperature or pressure increases until TR opens, the burner progressively decreases its output to the MIN value (section D-E). The sequence repeats endlessly.
- The burner locks out when the heat request is less than the heat supplied by the burner at MIN output, (section F-G).
  The TL thermostat/pressure switch opens, and the servomotor returns to angle 0° limited by the contact of cam 2).
  The air damper closes completely to reduce heat losses to a minimum.

With each change of output, the servomotor automatically modifies the light oil output (using the eccentric) and the air flow rate (fan damper).

Burner with the RWF ... output power regulator
See manual enclosed with the adjuster.

6.13.3 Burner flame goes out during operation

If the flame should accidentally go out during operation, the burner will lock out within 1s.

Ignition failure

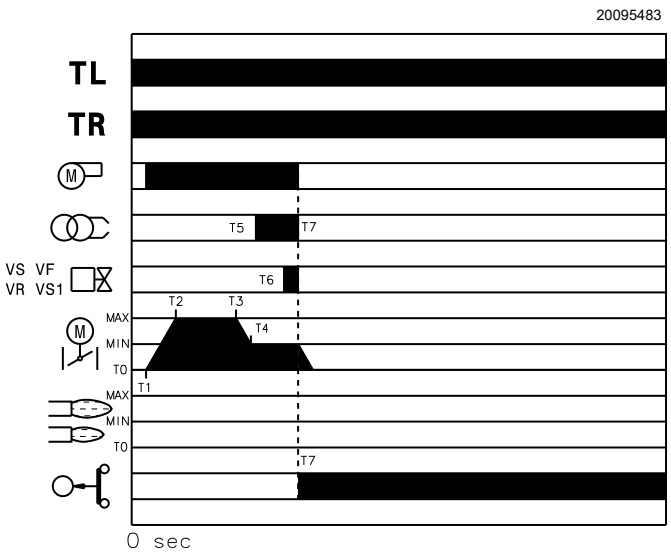

Fig. 43

6.13.4 Ignition failure

If the burner does not fire (Fig. 43), it goes into lockout within 3 sec. after the light oil valve opens and 122 seconds after the control device TL closes.

6.13.5 Control box reset

To carry out the control box reset, proceed as follows:
➤ Press the reset button 2) (Fig. 5 on page 14).

6.14 Final checks (with burner operating)

➤ Open the thermostat/pressure switch TL ➤ Open the thermostat/pressure switch TS	⇨	The burner must stop
➤ Turn the knob of the gas maximum pressure switch to the minimum end of scale position ➤ Turn the air pressure switch to the maximum end of scale position	⇨	The burner must stop in lockout
➤ Turn off the burner and cut off the power ➤ Disconnect the minimum gas pressure switch connector	⇨	The burner must not start
➤ Obscure the flame sensor	⇨	The burner must stop in lockout due to ignition failure
➤ Turn off the burner and cut off the power ➤ Disconnect the maximum gas pressure switch connector	⇨	The burner must not start
➤ Turn off the burner and cut off the power ➤ Disconnect the minimum oil pressure switch connector	⇨	The burner goes into lockout because the oil valves do not open

Tab. N

WARNING

Make sure that the mechanical locking systems on the various adjustment devices are fully tightened.

7 Maintenance

7.1 Notes on safety for the maintenance

The periodic maintenance is essential for the good operation, safety, yield and duration of the burner.

It allows you to reduce consumption and polluting emissions and to keep the product in a reliable state over time.

DANGER

The maintenance interventions and the calibration of the burner must only be carried out by qualified, authorised personnel, in accordance with the contents of this manual and in compliance with the standards and regulations of current laws.

Before carrying out any maintenance, cleaning or checking operations:

DANGER

Turn off the burner's power supply using the main system switch.

DANGER

Turn off the fuel interception tap.

7.2 Maintenance programme

7.2.1 Maintenance frequency

The gas combustion system should be checked at least once a year by a representative of the manufacturer or another specialised technician.

7.2.2 Checking and cleaning

Combustion
The optimum calibration of the burner requires an analysis of the flue gases.
Significant differences with respect to the previous measurements indicate the points where most care should be exercised during maintenance.

Combustion head
Open the burner and make sure that all components of the combustion head are in good condition, not deformed by the high temperatures, free of impurities from the surroundings and correctly positioned.

Burner
Check that there is no excess wear or loose screws, especially on cams 1) and 2)(Fig. 34).
Clean the outside of the burner.
Clean and grease the adjustable profile of the cams.

Fan
Check to make sure that no dust has accumulated inside the fan or on its blades, as this condition will cause: a reduction in the air flow rate and provoke polluting combustion.

Boiler
Clean the boiler as indicated in its accompanying instructions in order to maintain all the original combustion characteristics intact, especially: the flue gas temperature and combustion chamber pressure.

Electrical current to UV cell (Fig. 44)
Clean the glass cover from any dust that may have accumulated.
To remove the photocell, pull out outwards; it is only pressed in.
Min value for a good work: 70 µA.
If the value is lower, it could be due to:
– exhausted photocell
– low voltage (lower than 187 V)
– bad regulation of the burner
In order to measure the current, use a microammeter of 100 µA d.c., connected in series to the photocell, as in the scheme, with a capacitor of 100 µF - 1V d.c. at the same level of the instrument.

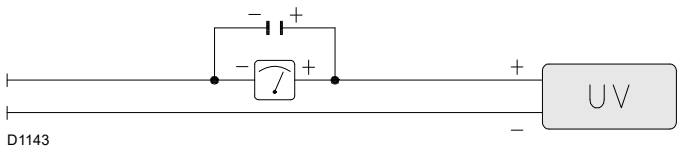

Fig. 44

LIGHT OIL OPERATION

Pump
The delivery pressure must be stable at 20 bar.
The depression must be less than 0.45 bar.
Unusual noise must not be evident during pump operation.
If the pressure is unstable, or the pump runs noisily, the flexible hose must be detached from the line filter and the fuel must be sucked from a tank located near the burner. This measure permits the cause of the anomaly to be traced to either the suction piping or the pump.
If the problem lies in the suction line, check the filter is clean and that air is not entering the piping.

Filters (Fig. 45)
Check the filtering baskets on line 1) and at nozzle 2) present in the system.
Clean or replace if necessary.
If rust or other impurities are observed inside the pump, use a separate pump to lift any water and other impurities that may have deposited on the bottom of the tank.

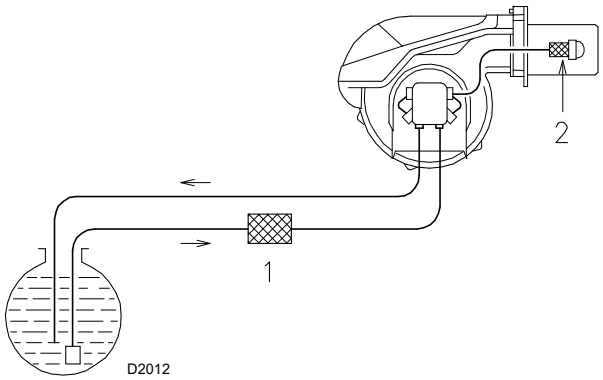

Fig. 45

Nozzles
It is advisable to replace nozzles once a year during periodical maintenance.
Do not clean the nozzle openings.

Hoses
Check that these are in good conditions.

Fuel tank
Approximately every 5 years, suck any water on the bottom of the tank using a separate pump.

Combustion
In case the combustion values found at the beginning of the intervention do not respect the standards in force or, in any case, do not correspond to a proper combustion, contact the Technical Assistance Service in order to carry out the necessary adjustments.

EN 267	Air excess		
	Max. output. $\lambda \leq 1.2$		Min. output $\lambda \leq 1.3$
Theoretical max CO_2 0 % O_2	CO_2 % Calibration		CO mg/kWh
	$\lambda = 1.2$	$\lambda = 1.3$	
15.2	12.6	11.5	≤ 100

GAS OPERATION

Gas leaks
Make sure that there are no gas leaks on the pipe between the gas meter and the burner.

Gas filter
Change the gas filter when it is dirty.

Combustion
In case the combustion values found at the beginning of the intervention do not respect the standards in force or, in any case, do not correspond to a proper combustion, contact the Technical Assistance Service in order to carry out the necessary adjustments.

EN 676		Air excess		
		Max. output. $\lambda \leq 1.2$		Min. output $\lambda \leq 1.3$
GAS	Theoretical max CO_2 0 % O_2	Calibration CO_2 %		CO mg/kWh
		$\lambda = 1.2$	$\lambda = 1.3$	
G 20	11.7	9.7	9.0	≤ 100
G 25	11.5	9.5	8.8	≤ 100
G 30	14.0	11.6	10.7	≤ 100
G 31	13.7	11.4	10.5	≤ 100

7.3 Opening the burner

DANGER

Disconnect the burner from the electrical supply.

The burner leaves the factory set for opening to the right, therefore maintaining the pin 1)(Fig. 14) in its housing.

To open the burner towards the right, proceed as follows:

A remove the screw 6) releasing the tie-rod 7)(Fig. 14);
B remove the screws 2);
C open the burner to a maximum of 100-150 mm by rotating around the hinge and release the cables of the electrodes 5);
D fully open the burner as in Fig. 14;
E undo the screw 4) with pressure test point;
F disconnect the light oil pipes by unscrewing the two swivel fittings 8);
G release the head by lifting it from its housing 3), then take out the combustion head.

WARNING

To open the burner from the opposite side, before removing the pin 1)(Fig. 14), make sure that the 4 screws 2) are tight. Then shift the pin 1) to the opposite side, only then is it possible to remove the screws 2); then proceed as described in point **C**.

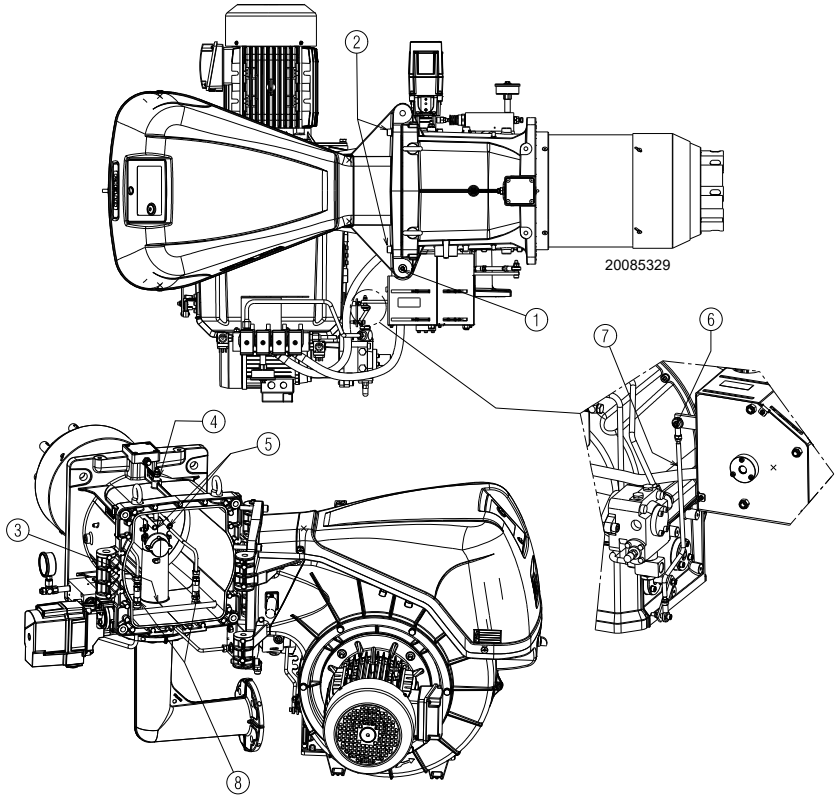

Fig. 46

7.4 Closing the burner

Refit following the steps described but in reverse order; refit all burner components as they were originally assembled.

8 Faults - Possible causes - Solutions

The LFL electronic control box is equipped with a lockout indicator (Fig. 47) which turns during the start-up programme, and which can be seen from the small reset window.

When the burner does not start or stops, due to a failure, the symbol that appears on the indicator indicates the type of interruption.

The positions of the lockout indicator are shown in Fig. 48.

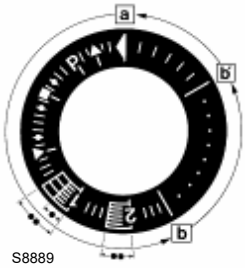

Lockout indicator

a-b	Start-up sequence
b-b'	Idle stages (without contact confirmation)
b(b')-a	Post-purging programme

Fig. 47

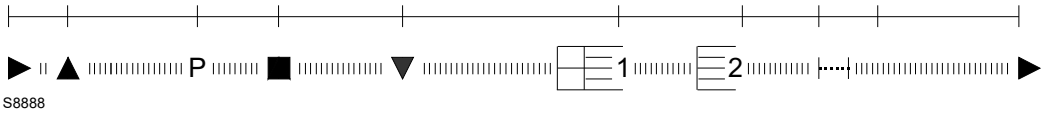

Fig. 48

Fuse replacement

The fuse 2)(Fig. 49) is in the rear part of the control box. A spare fuse 1) is also available: it can be extracted after breaking the panel tab A) that houses it. In the event that fuse 2) has been tripped, replace it as shown in Fig. 49.

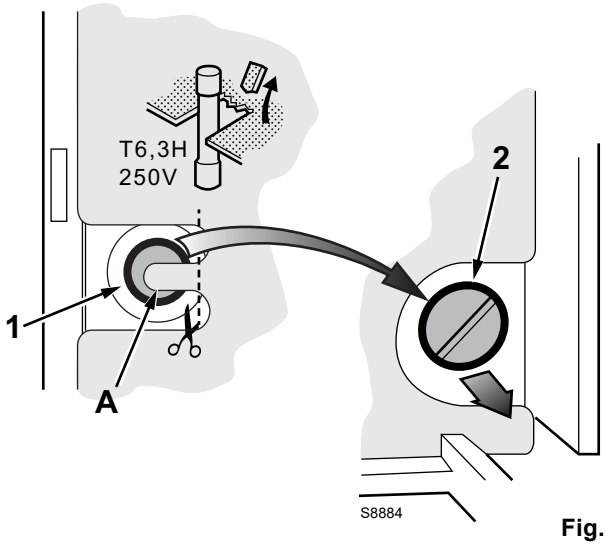

Fig. 49

Find a list of faults, causes and possible solutions for a set of failures that may occur and result in irregular burner operation or no functioning at all.

If a burner malfunction is detected, first of all:
- check that the electrical wiring is adequately connected;
- check whether fuel is delivered;
- check that every adjustment parameter is adequately set.

WARNING

In the event the burner stops, in order to prevent any damage to the installation, do not unblock the burner more than twice in a row. If the burner locks out for a third time, contact the customer service.

DANGER

In the event there are further lockouts or faults with the burner, the maintenance interventions must only be carried out by qualified, authorised personnel, in accordance with the contents of this manual and in compliance with the standards and regulations of current laws.

Find a list of faults, causes and possible solutions for a set of failures that may occur and result in irregular burner operation or no functioning at all.

If a burner malfunction is detected, first of all:
- check that the electrical wiring is adequately connected;
- check whether fuel is delivered;
- check that every adjustment parameter is adequately set.

GAS OPERATION			
Symbol (1)	**Problem**	**Possible cause**	**Recommended remedy**
◀	The burner does not start	No electrical power supply	Close all switches and check connections
		A limit or safety thermostat/pressure switch open	Adjust or replace
		Control box lockout	Release the control box
		Control box fuse interrupted	Replace it (2)
		Incorrect electrical wiring	Check
		Defective control box	Replace
		No gas supply	Open the manual valves between meter and train
		Mains gas pressure insufficient	Contact your GAS COMPANY
		Minimum gas pressure switch fails to close	Adjust or replace
		Air pressure switch in operating position	Adjust or replace
		The servomotor contact does not intervene (closure cam 0°)	Adjust the closure cam 0° or replace the servomotor
	The burner does not switch on, and the lock-out appears	Flame simulation	Replace the control box
		Faulty motor remote control switch	Replace
		Defective electrical motor	Replace
		Motor lockout	Release the thermal relay
▲	The burner starts up but stops at the damper maximum opening	The servomotor contact does not intervene (maximum cam opening)	Cam adjustment (maximum opening) or replace the servomotor
P	The burner starts and then goes into lockout	Air pressure switch does not commute due to insufficient air pressure:	Adjust or replace
		Pressure switch pressure point pipe blocked	Clean
		Air pressure test point defective or broken	Check the assembly or replace it
		Dirty fan	Clean
		High depression in the furnace	Contact our Technical Department
■	The burner turns on and then remains in lockout mode	Failure to the flame detection circuit	Replace the control box
▼	The burner remains in pre-purging phase	The servomotor contact does not intervene (minimum cam)	Cam adjustment (minimum) or replace the servomotor
1	Once the pre-purging and the safety time has elapsed the burner goes into lockout without the flame appearing	The VR solenoid lets too little gas through	Increase
		The VR or VS solenoid or does not open	Replace the coil or the rectifier panel
		Gas pressure too low	Increase pressure at governor
		Ignition electrode incorrectly adjusted	Adjust it
		Electrode grounded due to broken insulation	Replace
		Faulty or grounded high voltage cable	Replace
		High voltage cable deformed by high temperature	Replace and protect
		Faulty ignition transformer	Replace
		Incorrect valve or ignition transformer connections	Redo them
		Defective control box	Replace
		A closed valve upline the gas train	Open
		Air in pipework	Bleed air
	Lockout with flame appearing	The VR solenoid lets too little gas through	Increase
		Dirty flame sensor	Check, replace flame sensor
		Faulty connection	Check, replace flame sensor
		Insufficient detection current	Measure current, replace flame sensor
		Flame sensor exhausted, faulty	Replace
		Maximum gas pressure switch intervention	Adjust or replace
		Defective control box	Replace

GAS OPERATION			
Symbol (1)	**Problem**	**Possible cause**	**Recommended remedy**
	The burner continues to repeat the start-up cycle, without lockout	The gas pressure in the gas mains lies very close to the value to which the minimum gas pressure switch has been set. The sudden drop in pressure after valve opening causes temporary opening of the pressure switch itself, the valve immediately closes and the burner comes to a halt. Pressure increases again, the pressure switch closes again and the ignition cycle is repeated. The sequence repeats endlessly.	Reduce the minimum gas pressure switch intervention pressure. Replace the gas filter cartridge
	Lockout without symbol indication	Flame simulation	Replace the control box
|	Burner goes into lockout during operation	Faulty flame sensor	Replace worn parts
		Air pressure switch faulty	Replace
		Maximum gas pressure switch intervention	Adjust or replace
◀	Lockout when the burner stops	Permanent flame in the combustion head or flame simulation	Eliminate permanency of flame or replace the control box
	Ignition with pulsations	Poorly adjusted head	Adjust
		Ignition electrode incorrectly adjusted	Adjust it
		Incorrectly adjusted fan air damper: too much air	Adjust
		Output during ionisation phase is too high	Reduce

(1) The control box has a disc that turns during the start-up program, visible from the reset sight window.
When the burner does not start or stops, due to a failure, the symbol that appears on the sight window indicates the type of interruption.

(2) The fuse is in the rear part of the control box. A spare fuse is also available: it can be extracted after breaking the panel tab that houses it.

LIGHT OIL OPERATION			
Symbol (1)	**Problem**	**Possible cause**	**Recommended remedy**
◀	The burner does not start	Limiter or safety control device open	Adjust or replace
		Control box lockout	Release
		Fan motor lockout	Release the thermal relay
		Intervention of maximum oil pressure switch	Adjust the pressure switch or eliminate overpressure
		No electrical power supply	Close all switches - check connections
		No light oil	Check the light oil supply circuit
		Control box fuse interrupted	Replace
		Pump is jammed	Replace
		Faulty motor remote control switch	Replace
		Defective control box	Replace
		Faulty electrical motor	Replace
		Defective safety solenoid valve	Replace
		Faulty oil modulator	Service it or replace it
	The burner does not switch on, and the lock-out appears	Flame simulation	Replace the control box
		Photocell short-circuit	Replace photocell
		Two-phase electrical supply, thermal relay steps in	Reset the thermal relay at return of the three phases
▲	The burner starts but stops at maximum air damper setting	The servomotor contact does not intervene (minimum cam opening)	Adjust the maximum cam opening or replace servomotor
P	The burner starts and then goes into lockout	Air pressure switch does not commute due to insufficient air pressure	Adjust or replace
		Pressure switch pressure point pipe blocked	Clean
		Air pressure test point defective or broken	Check the assembly or replace it
		Dirty fan	Clean
		High depression in the furnace	Contact our Technical Department
■	The burner switches on, but then stops in lockout	Failure to the flame detection circuit	Replace control box
▼	The burner remains in pre-purging phase	The servomotor contact does not intervene (minimum cam)	Adjust minimum cam or replace servomotor

LIGHT OIL OPERATION			
Symbol (1)	**Problem**	**Possible cause**	**Recommended remedy**
1	Once the pre-purging and the safety time has elapsed the burner goes into lockout without the flame appearing	No fuel in the tank, or water on the bottom	Refill with fuel, or remove the water
		Bad head and damper adjustments	Adjust
		Faulty or grounded high voltage cable	Replace
		High voltage cable deformed by high temperature	Replace and protect
		Bad electrical wiring on valves or transformer	Check
		Pump unprimed	Prime it
		Pump suction line connected to return line	Correct connection
		Dirty filters (nozzle line)	Clean
		The valves upstream from the pump are closed	Open them
		Opposite motor rotation	Change electrical wiring to the motor
		Light oil solenoids do not open	Check connections and solenoids
		Nozzle clogged, soiled or deformed	Clean it or replace it
		Defective control box	Replace
		Ignition electrode incorrectly adjusted	Adjust it
		Electrode grounded due to broken insulation	Replace
		Motor/pump coupling broken	Replace
		Faulty ignition transformer	Replace
	The flame ignites regularly but the burner goes into lock out at the end of the safety time	Control box defective	Replace flame sensor or control box
		Dirty flame sensor	Clean
		Insufficient detection current	Measure current, replace flame sensor
	Smoke in flame (dark Bacharach)	Little air	Adjust the fan head and damper
		Incorrect pump pressure	Adjust
		Nozzle filter clogged	Clean or replace
		Insufficient boiler room ventilation openings	Increase
		Dirty or worn nozzle	Replace
		Flame disk soiled, loose or deformed	Clean it, tighten it or replace it
	Smoke in flame (yellow Bacharach)	Excessive air	Adjust head and air dampers
	Ignition with pulses or flame failure, delayed ignition	Poorly adjusted head	Adjust
		Incorrectly adjusted fan air damper: too much air	Adjust
		Nozzle not fit for burner or boiler	See the nozzle table
		Faulty nozzle	Replace
		Unsuitable pump pressure	Adjust
		Ignition electrode not adjusted correctly or soiled	Adjust it
		Output during ionisation phase is too high	Reduce
	Uneven fuel supply	Understand whether the cause lies in the pump or the fuel supply system	Supply fuel to the burner from a tank positioned near the burner itself
	Internally rusted pump	Water in the tank	Remove the water with a pump
	Noisy pump, unstable pressure	Air in the suction line	Block the couplings
		Depression value too high (higher than 35 cm Hg)	
		Excessive difference of level between burner and tank	Power the burner from a loop circuit
		Piping diameter too small	Increase
		Dirty suction line filters	Clean
		Suction line valves closed	Open them
		The paraffin solidifies due to the low temperature	Put additive in the light oil

LIGHT OIL OPERATION			
Symbol (1)	**Problem**	**Possible cause**	**Recommended remedy**
	Pump unprimes after prolonged pause	Return pipeline not immersed in the fuel	Bring it to the same height as the suction line
		Air in the suction line	Block the couplings
	Pump leaks light oil	Loss of sealing organ	Replace the pump
	Dirty combustion head	Dirty nozzle or nozzle filter	Replace
		Unsuitable nozzle delivery or angle	See recommended nozzles
		Loose nozzle	Block it
		Environmental impurities on flame stability disc	Clean
		Incorrect head adjustment, or little air	Adjust it, opening the damper
		Blast tube length not suitable for the boiler	Contact the boiler manufacturer
I	Burner goes into lockout during operation	Photocell faulty or soiled	Replace it or clean it
		Air pressure switch faulty	Replace

(1) The control box has a disc that turns during the start-up program, visible from the reset sight window.
When the burner does not start or stops, due to a failure, the symbol that appears on the sight window indicates the type of interruption.

A Appendix - Accessories

Analogue control signal converter kit

Burner	Type	Code
All models	0/2 - 10V 0/4 - 20mA	20074479

Kit for modulating operation

Burner	Output regulator	Code
All models	RWF 50.2 3-POINT OUTLET	20073595
All models	RWF 55.5 COMPLETE WITH RS-485 INTERFACE	20074441
All models	RWF 55.6 COMPLETE WITH INTERFACE RS-485/PROFIBUS	20074442

Burner	Probe	Adjustment field	Code
All models	PT 100 temperature	- 100...+ 500°C	3010110
All models	4 - 20 mA pressure	0...2.5 bar	3010213
All models	4 - 20 mA pressure	0...16 bar	3010214

Potentiometer kit

Burner	Code
All models	20096322

Continuous purging kit

Burner	Code
All models	20074542

Kit for remote fuel commutation

Burner	
All models	ON DEMAND

Soundproofing box kit

Burner	Type	dB(A)	Code
RLS 310 - 410/M MX	C7	10	3010376
RLS 510 - 610/M MX	C7 PLUS	10	20085111

Gas trains in compliance with EN 676

Please refer to manual.

B Appendix - Electrical panel layout

1	**Contents**
2	Indication of references
3	Single line output diagram (RLS 310/M MX 230 V - Direct Start Up) Single line output diagram (RLS 310/M MX 400 V - Direct Start Up) Single line output diagram (RLS 410/M MX 230 V - Direct Start Up) Single line output diagram (RLS 410/M MX 400 V - Direct Start Up) Single line output diagram (RLS 310/M MX 400 V - Star/Triangle Start Up) Single line output diagram (RLS 410/M MX 400 V - Star/Triangle Start Up) Single line output diagram (RLS 510/M MX 400 V - Star/Triangle Start Up) Single line output diagram (RLS 610/M MX 400 V - Star/Triangle Start Up)
4	Functional layout (RLS 310-410/M MX 230/400 V - Direct Start Up) Functional layout star/triangle starter (RLS 310-410-510-610/M MX 400 V - Star/Triangle Start Up)
5	Functional layout LFL1... (RLS 310-410/M MX 230/400 V - Direct Start Up) Functional layout LFL1... (RLS 310-410-510-610/M MX 400 V - Star/Triangle Start Up)
6	Functional layout LFL1...
7	Functional layout LFL1...
8	Functional layout LFL1...
9	Electrical wiring Kit RWF50 internal
10	Electrical wirings that are the responsibility of the installer (RLS 310-410/M MX 230V - Direct Start Up) Electrical wirings that are the responsibility of the installer (RLS 310-410/M MX 400V - Direct Start Up) Electrical wirings that are the responsibility of the installer (RLS 310-410-510-610/M MX 400V - Star/triangle Start Up)
11	Electrical wiring that the installer is responsible for
12	Output power regulator inputs/outputs

2 Indication of references

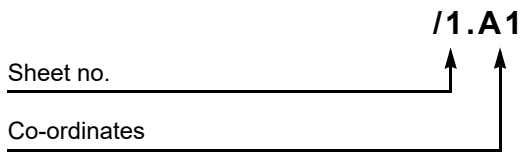

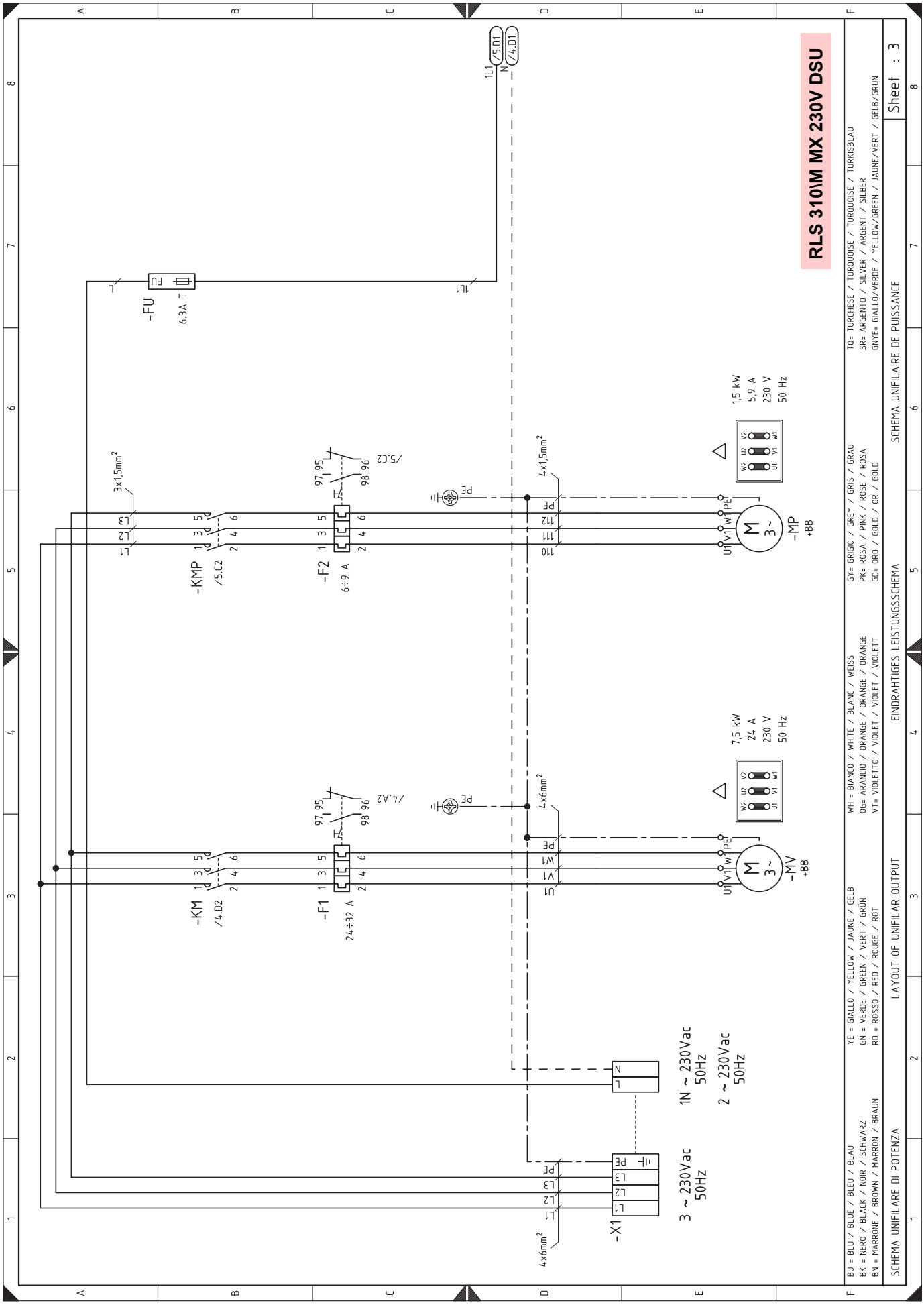
RLS 310\M MX 230V DSU
-FU
6.3A T
-KMP
/5.C2
-F2
6÷9 A
-MP
+BB
1,5 kW
5,9 A
230 V
50 Hz
-KM
/4.D2
-F1
24÷32 A
-MV
+BB
7,5 kW
24 A
230 V
50 Hz
-X1
1N ~ 230Vac
50Hz
2 ~ 230Vac
50Hz
3 ~ 230Vac
50Hz
SCHEMA UNIFILARE DI POTENZA
LAYOUT OF UNIFILAR OUTPUT
EINDRAHTIGES LEISTUNGSSCHEMA
SCHEMA UNIFILAIRE DE PUISSANCE
Sheet : 3

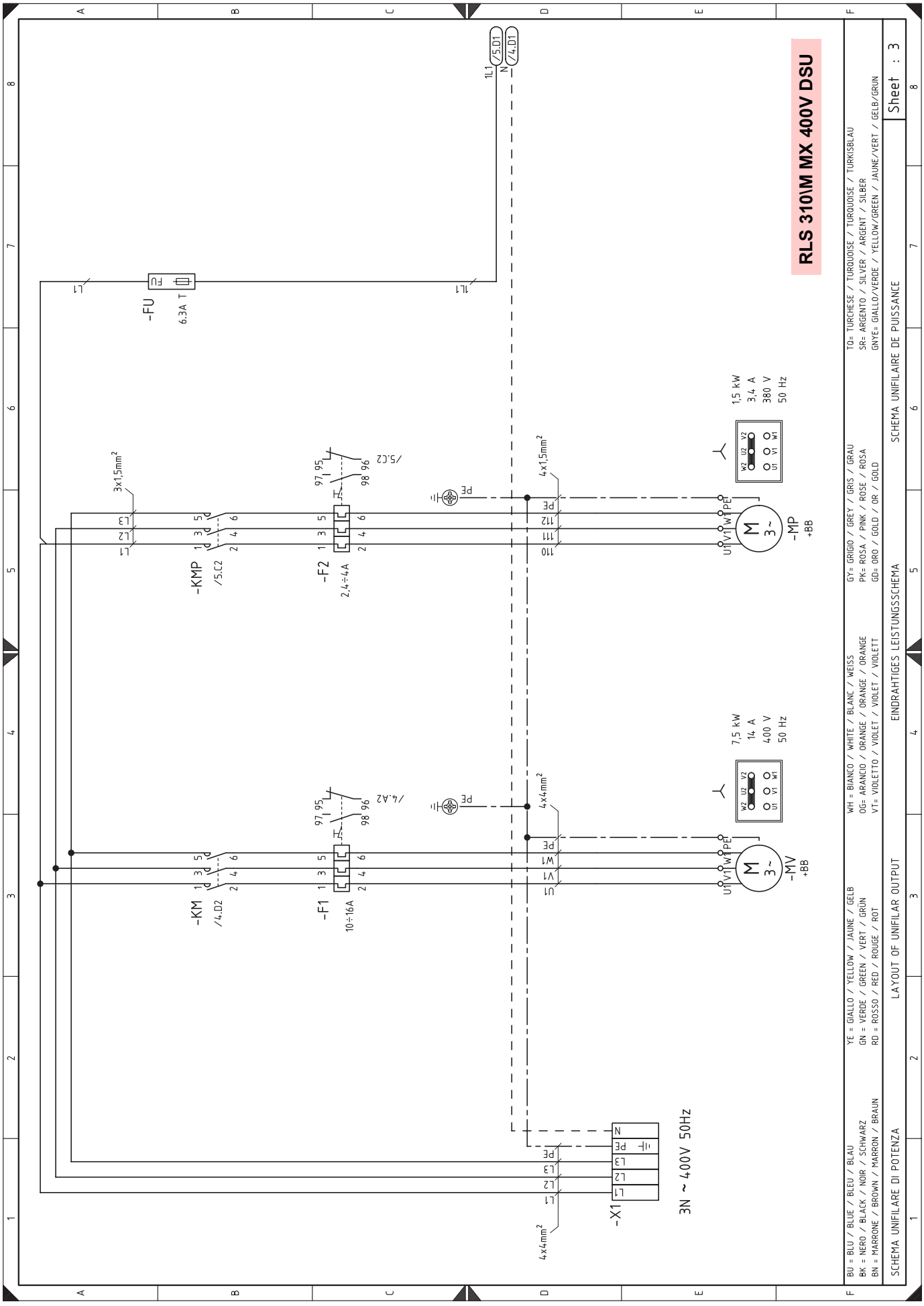
RLS 310\M MX 400V DSU
-FU
6.3A T
-KMP
/5.C2
-F2
2,4÷4A
-KM
/4.D2
-F1
10÷16A
-MP
+BB
1,5 kW
3,4 A
380 V
50 Hz
-MV
+BB
7,5 kW
14 A
400 V
50 Hz
-X1
3N ~ 400V 50Hz
BU = BLU / BLUE / BLEU / BLAU
BK = NERO / BLACK / NOIR / SCHWARZ
BN = MARRONE / BROWN / MARRON / BRAUN
YE = GIALLO / YELLOW / JAUNE / GELB
GN = VERDE / GREEN / VERT / GRÜN
RD = ROSSO / RED / ROUGE / ROT
WH = BIANCO / WHITE / BLANC / WEISS
OG= ARANCIO / ORANGE / ORANGE / ORANGE
VT= VIOLETTO / VIOLET / VIOLET / VIOLETT
GY= GRIGIO / GREY / GRIS / GRAU
PK= ROSA / PINK / ROSE / ROSA
GD= ORO / GOLD / OR / GOLD
TQ= TURCHESE / TURQUOISE / TURQUOISE / TURKISBLAU
SR= ARGENTO / SILVER / ARGENT / SILBER
GNYE= GIALLO/VERDE / YELLOW/GREEN / JAUNE/VERT / GELB/GRÜN
SCHEMA UNIFILARE DI POTENZA
LAYOUT OF UNIFILAR OUTPUT
EINDRAHTIGES LEISTUNGSSCHEMA
SCHEMA UNIFILAIRE DE PUISSANCE
Sheet : 3

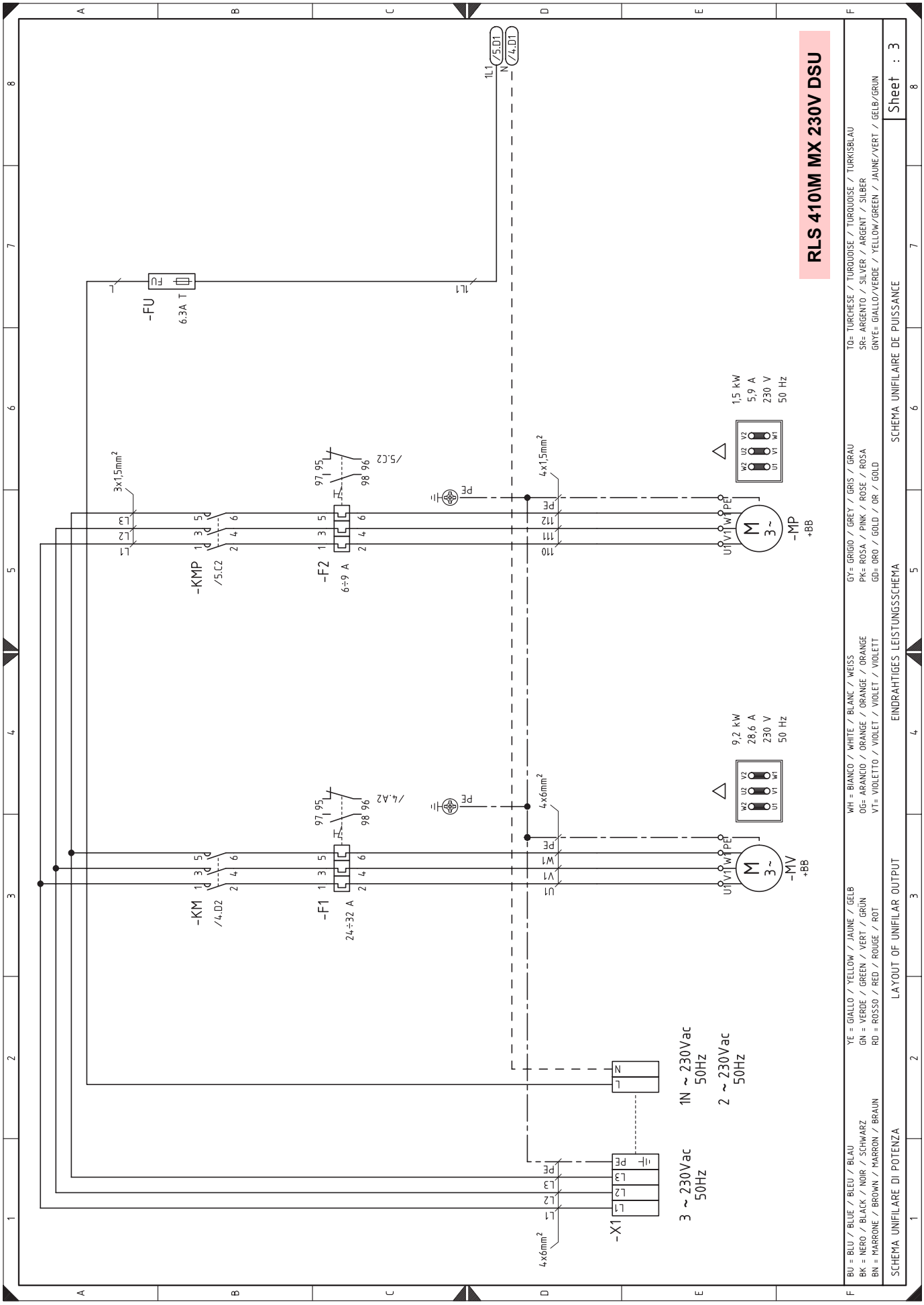
RLS 410\M MX 230V DSU
-FU
6.3A T
-KMP
/5.C2
-F2
6÷9 A
-KM
/4.D2
-F1
24÷32 A
-MP
+BB
-MV
+BB
1,5 kW
5,9 A
230 V
50 Hz
9,2 kW
28,6 A
230 V
50 Hz
-X1
1N ~ 230Vac
50Hz
2 ~ 230Vac
50Hz
3 ~ 230Vac
50Hz
3x1,5mm²
4x1,5mm²
4x6mm²
4x6mm²
SCHEMA UNIFILARE DI POTENZA
LAYOUT OF UNIFILAR OUTPUT
EINDRAHTIGES LEISTUNGSSCHEMA
SCHEMA UNIFILAIRE DE PUISSANCE
Sheet : 3
BU = BLU / BLUE / BLEU / BLAU
BK = NERO / BLACK / NOIR / SCHWARZ
BN = MARRONE / BROWN / MARRON / BRAUN
YE = GIALLO / YELLOW / JAUNE / GELB
GN = VERDE / GREEN / VERT / GRÜN
RD = ROSSO / RED / ROUGE / ROT
WH = BIANCO / WHITE / BLANC / WEISS
OG= ARANCIO / ORANGE / ORANGE / ORANGE
VT= VIOLETTO / VIOLET / VIOLET / VIOLETT
GY= GRIGIO / GREY / GRIS / GRAU
PK= ROSA / PINK / ROSE / ROSA
GD= ORO / GOLD / OR / GOLD
TQ= TURCHESE / TURQUOISE / TURQUOISE / TURKISBLAU
SR= ARGENTO / SILVER / ARGENT / SILBER
GNYE= GIALLO/VERDE / YELLOW/GREEN / JAUNE/VERT / GELB/GRUN

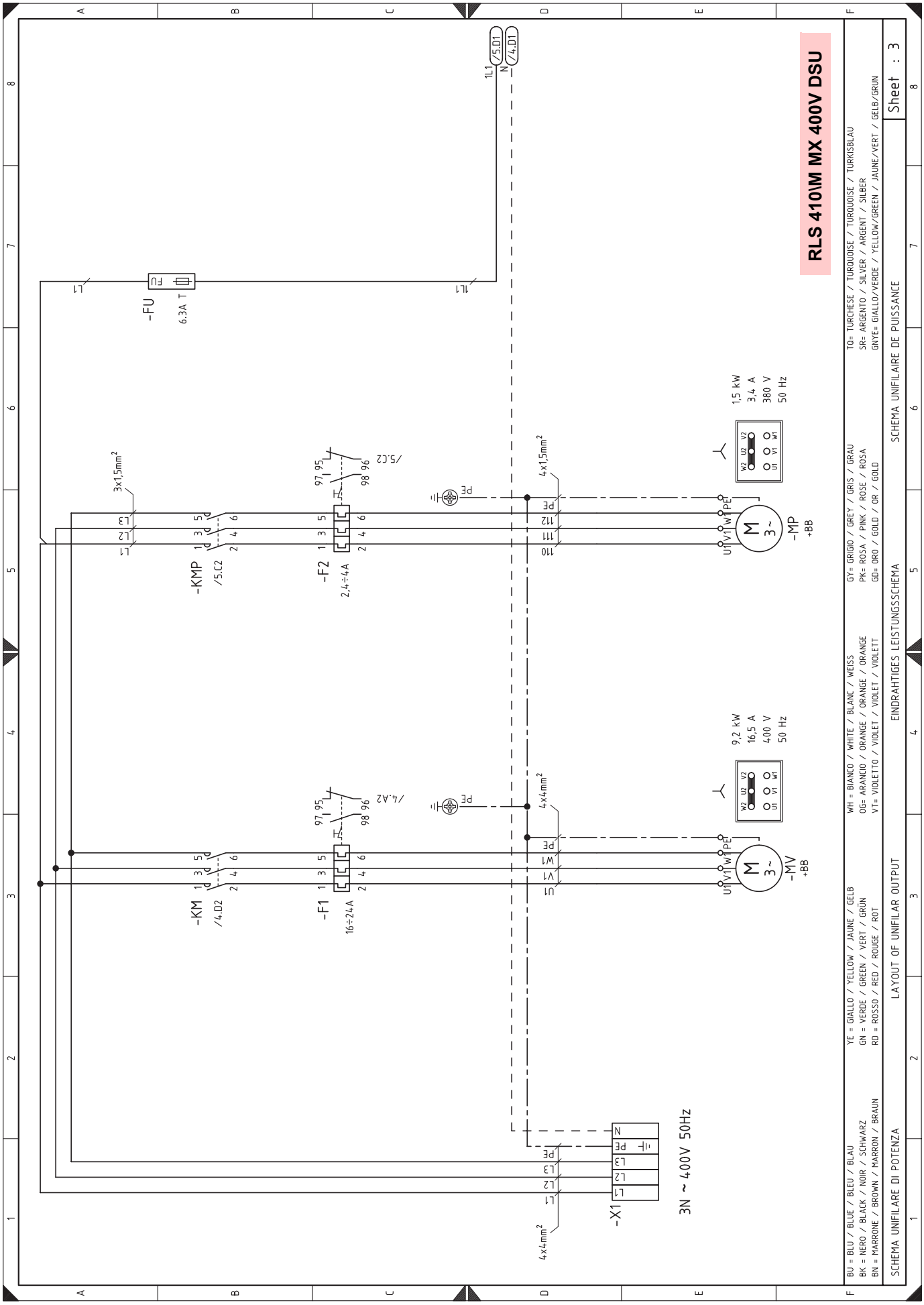
RLS 410\M MX 400V DSU
SCHEMA UNIFILARE DI POTENZA
LAYOUT OF UNIFILAR OUTPUT
EINDRAHTIGES LEISTUNGSSCHEMA
SCHEMA UNIFILAIRE DE PUISSANCE
Sheet : 3
-FU
6.3A T
-KMP
/5.C2
-F2
2,4÷4A
-KM
/4.D2
-F1
16÷24A
-MP
+BB
-MV
+BB
1,5 kW
3,4 A
380 V
50 Hz
9,2 kW
16,5 A
400 V
50 Hz
-X1
3N ~ 400V 50Hz
BU = BLU / BLUE / BLEU / BLAU
BK = NERO / BLACK / NOIR / SCHWARZ
BN = MARRONE / BROWN / MARRON / BRAUN
YE = GIALLO / YELLOW / JAUNE / GELB
GN = VERDE / GREEN / VERT / GRÜN
RD = ROSSO / RED / ROUGE / ROT
WH = BIANCO / WHITE / BLANC / WEISS
OG= ARANCIO / ORANGE / ORANGE / ORANGE
VT= VIOLETTO / VIOLET / VIOLET / VIOLETT
GY= GRIGIO / GREY / GRIS / GRAU
PK= ROSA / PINK / ROSE / ROSA
GD= ORO / GOLD / OR / GOLD
TQ= TURCHESE / TURQUOISE / TURQUOISE / TURKISBLAU
SR= ARGENTO / SILVER / ARGENT / SILBER
GNYE= GIALLO/VERDE / YELLOW/GREEN / JAUNE/VERT / GELB/GRUN

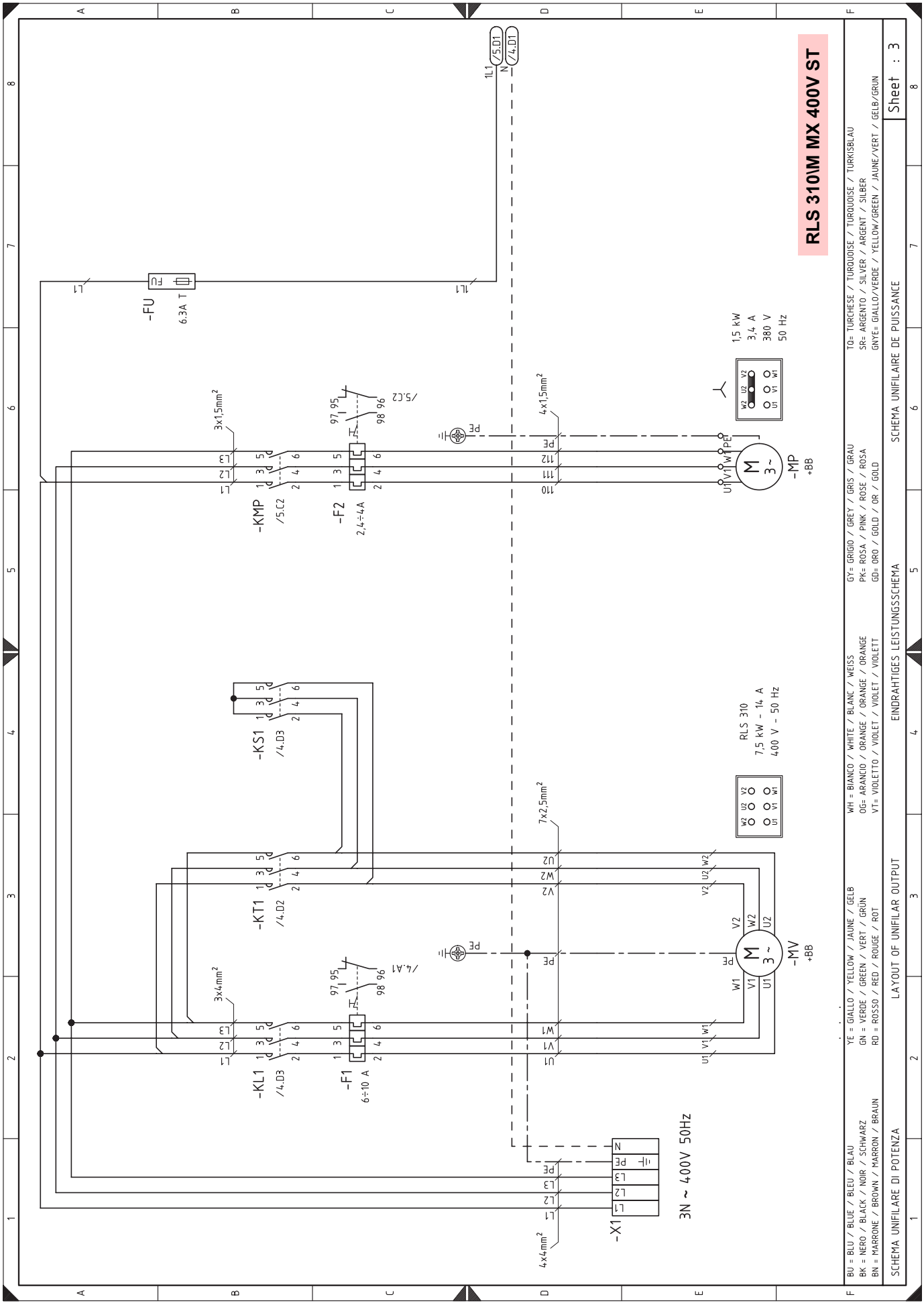
RLS 310\M MX 400V ST
-FU
6.3A T
-KMP
-F2
2,4÷4A
-KS1
-KT1
-KL1
-F1
6÷10 A
-MP
1,5 kW
3,4 A
380 V
50 Hz
-MV
RLS 310
7,5 kW - 14 A
400 V - 50 Hz
-X1
3N ~ 400V 50Hz
3x1,5mm²
4x1,5mm²
7x2,5mm²
3x4mm²
4x4mm²
SCHEMA UNIFILARE DI POTENZA
LAYOUT OF UNIFILAR OUTPUT
EINDRAHTIGES LEISTUNGSSCHEMA
SCHEMA UNIFILAIRE DE PUISSANCE
Sheet : 3
BU = BLU / BLUE / BLEU / BLAU
BK = NERO / BLACK / NOIR / SCHWARZ
BN = MARRONE / BROWN / MARRON / BRAUN
YE = GIALLO / YELLOW / JAUNE / GELB
GN = VERDE / GREEN / VERT / GRÜN
RD = ROSSO / RED / ROUGE / ROT
WH = BIANCO / WHITE / BLANC / WEISS
OG= ARANCIO / ORANGE / ORANGE / ORANGE
VT= VIOLETTO / VIOLET / VIOLET / VIOLETT
GY= GRIGIO / GREY / GRIS / GRAU
PK= ROSA / PINK / ROSE / ROSA
GD= ORO / GOLD / OR / GOLD
TQ= TURCHESE / TURQUOISE / TURQUOISE / TURKISBLAU
SR= ARGENTO / SILVER / ARGENT / SILBER
GNYE= GIALLO/VERDE / YELLOW/GREEN / JAUNE/VERT / GELB/GRUN

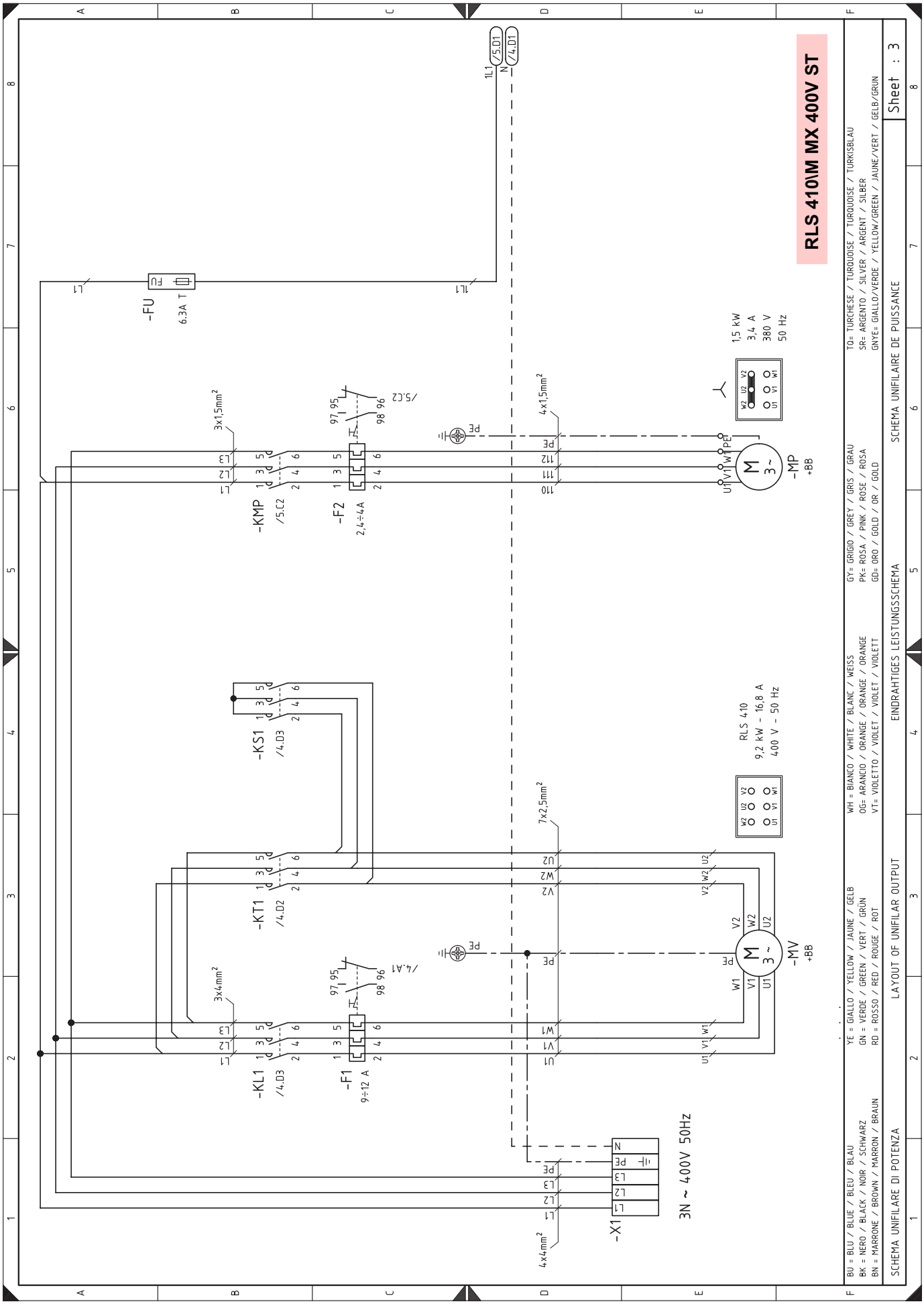
RLS 410\M MX 400V ST
SCHEMA UNIFILARE DI POTENZA
LAYOUT OF UNIFILAR OUTPUT
EINDRAHTIGES LEISTUNGSSCHEMA
SCHEMA UNIFILAIRE DE PUISSANCE
Sheet : 3
-FU
6.3A T
-KMP
-F2
2,4÷4A
-MP
1,5 kW
3,4 A
380 V
50 Hz
-KS1
-KT1
-KL1
-F1
9÷12 A
-MV
RLS 410
9,2 kW - 16,8 A
400 V - 50 Hz
-X1
3N ~ 400V 50Hz
BU = BLU / BLUE / BLEU / BLAU
BK = NERO / BLACK / NOIR / SCHWARZ
BN = MARRONE / BROWN / MARRON / BRAUN
YE = GIALLO / YELLOW / JAUNE / GELB
GN = VERDE / GREEN / VERT / GRÜN
RD = ROSSO / RED / ROUGE / ROT
WH = BIANCO / WHITE / BLANC / WEISS
OG= ARANCIO / ORANGE / ORANGE / ORANGE
VT= VIOLETTO / VIOLET / VIOLET / VIOLETT
GY= GRIGIO / GREY / GRIS / GRAU
PK= ROSA / PINK / ROSE / ROSA
GD= ORO / GOLD / OR / GOLD
TQ= TURCHESE / TURQUOISE / TURQUOISE / TURKISBLAU
SR= ARGENTO / SILVER / ARGENT / SILBER
GNYE= GIALLO/VERDE / YELLOW/GREEN / JAUNE/VERT / GELB/GRÜN

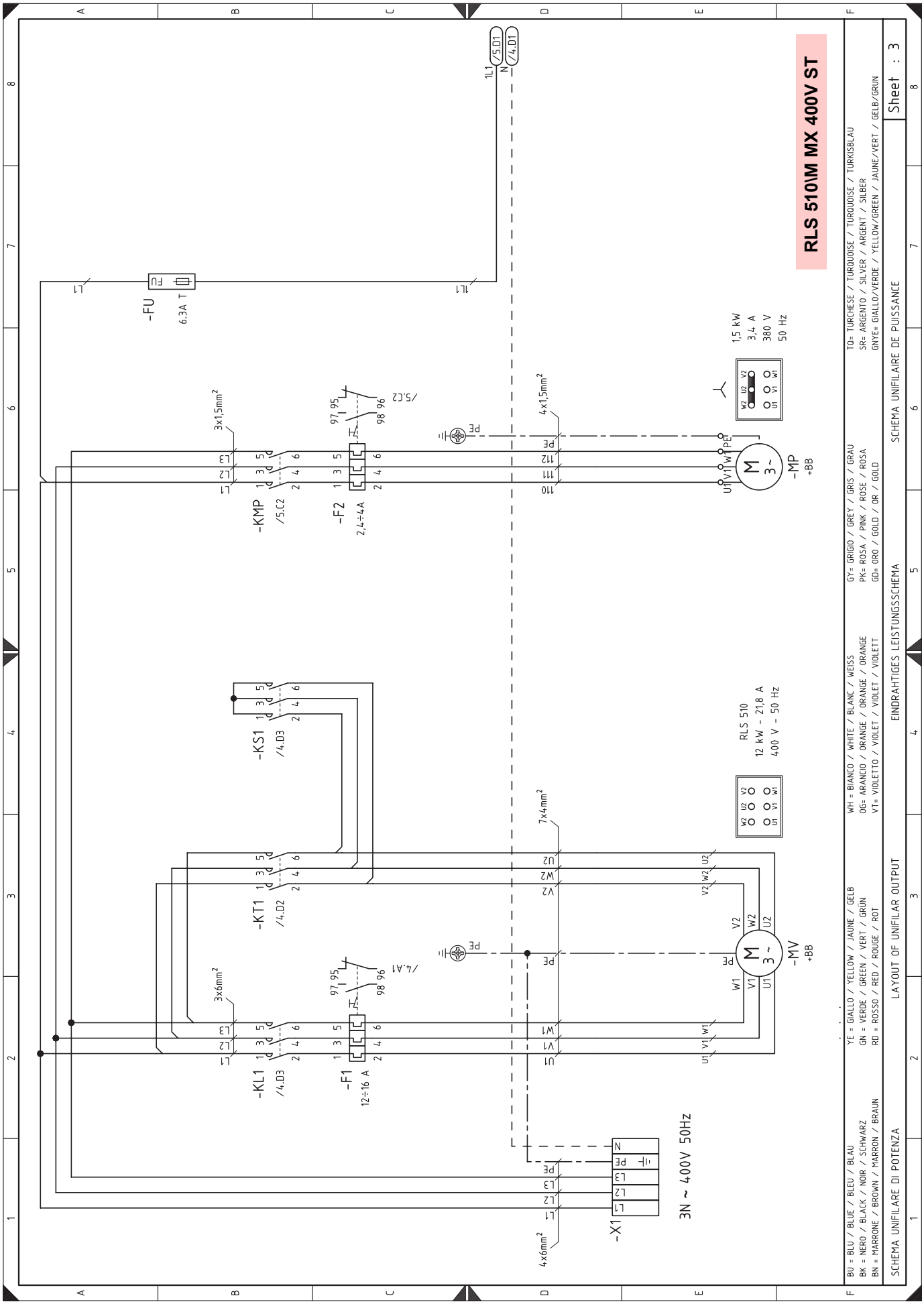
RLS 510\M MX 400V ST
-FU
6.3A T
-KMP
-F2
2,4÷4A
-KS1
-KT1
-KL1
-F1
12÷16 A
-MP
1,5 kW
3,4 A
380 V
50 Hz
-MV
RLS 510
12 kW - 21,8 A
400 V - 50 Hz
-X1
3N ~ 400V 50Hz
SCHEMA UNIFILARE DI POTENZA
LAYOUT OF UNIFILAR OUTPUT
EINDRAHTIGES LEISTUNGSSCHEMA
SCHEMA UNIFILAIRE DE PUISSANCE
Sheet : 3

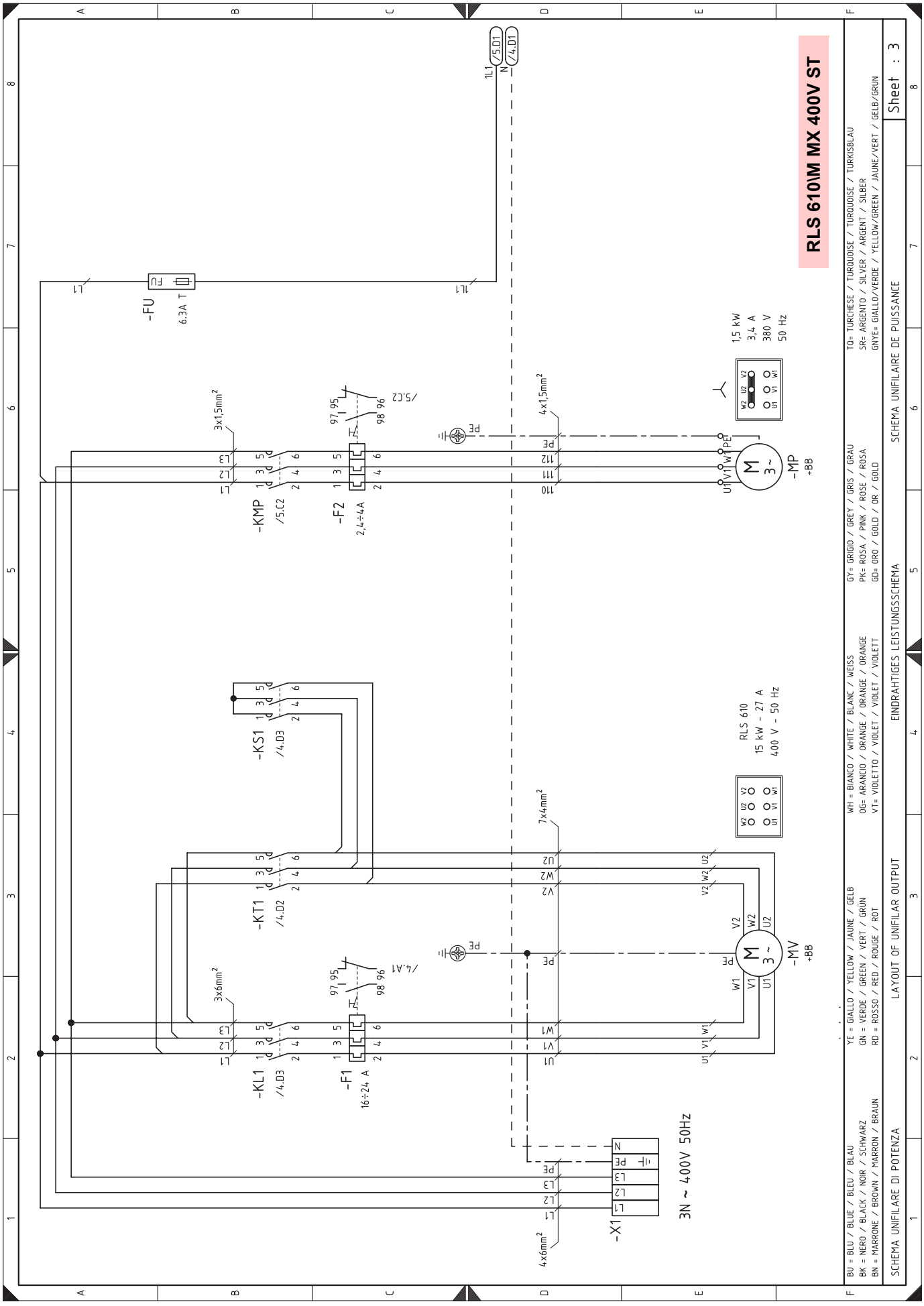
RLS 610\M MX 400V ST
-FU
6.3A T
-KMP
/5.C2
-F2
2,4÷4A
-MP
+BB
1,5 kW
3,4 A
380 V
50 Hz
-KS1
/4.D3
-KT1
/4.D2
-KL1
/4.D3
-F1
16÷24 A
-MV
+BB
RLS 610
15 kW - 27 A
400 V - 50 Hz
-X1
3N ~ 400V 50Hz
BU = BLU / BLUE / BLEU / BLAU
BK = NERO / BLACK / NOIR / SCHWARZ
BN = MARRONE / BROWN / MARRON / BRAUN
YE = GIALLO / YELLOW / JAUNE / GELB
GN = VERDE / GREEN / VERT / GRÜN
RD = ROSSO / RED / ROUGE / ROT
WH = BIANCO / WHITE / BLANC / WEISS
OG= ARANCIO / ORANGE / ORANGE / ORANGE
VT= VIOLETTO / VIOLET / VIOLET / VIOLETT
GY= GRIGIO / GREY / GRIS / GRAU
PK= ROSA / PINK / ROSE / ROSA
GD= ORO / GOLD / OR / GOLD
TQ= TURCHESE / TURQUOISE / TURQUOISE / TURKISBLAU
SR= ARGENTO / SILVER / ARGENT / SILBER
GNYE= GIALLO/VERDE / YELLOW/GREEN / JAUNE/VERT / GELB/GRÜN
SCHEMA UNIFILARE DI POTENZA
LAYOUT OF UNIFILAR OUTPUT
EINDRAHTIGES LEISTUNGSSCHEMA
SCHEMA UNIFILAIRE DE PUISSANCE
Sheet : 3

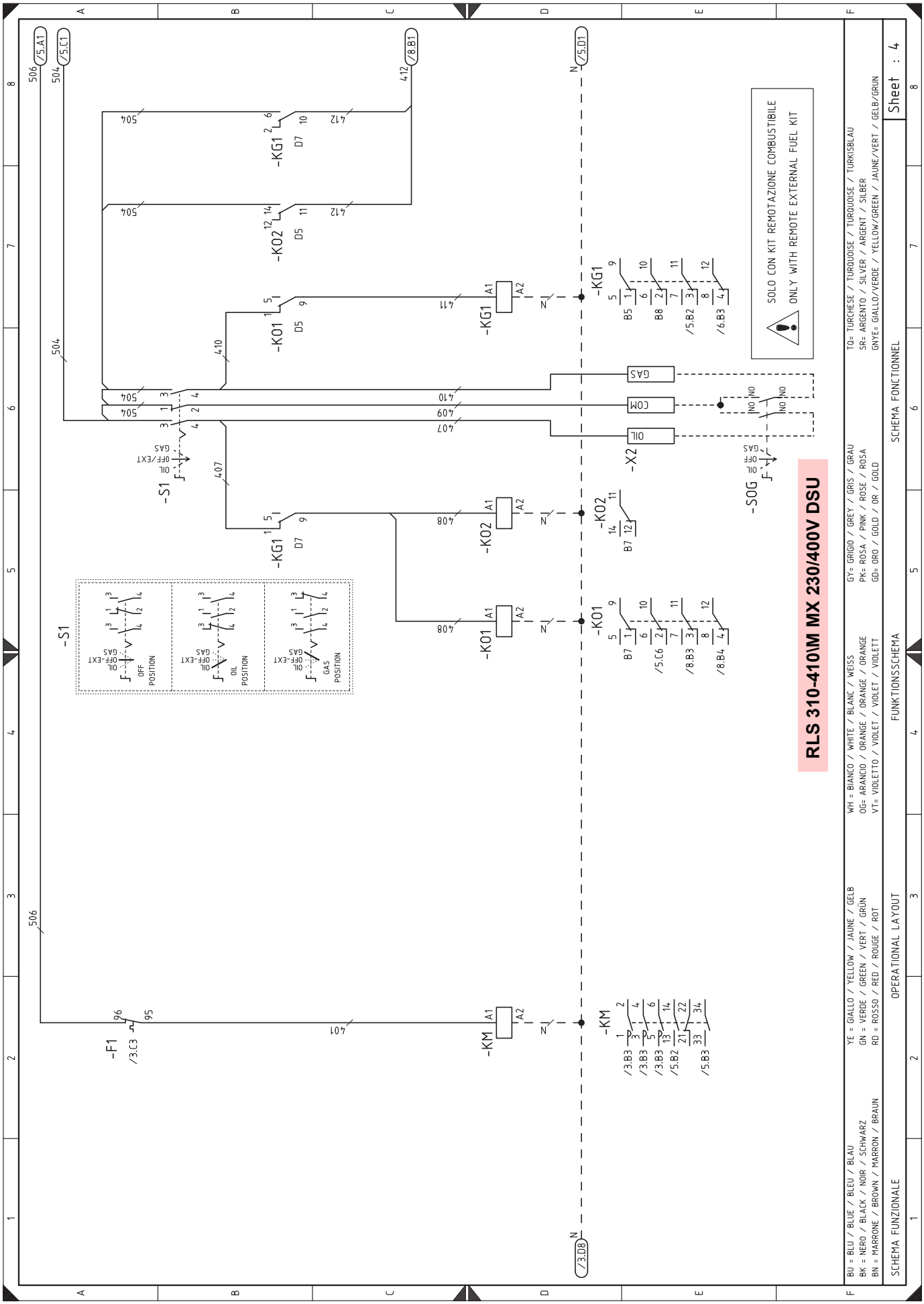
RLS 310-410\M MX 230/400V DSU
SOLO CON KIT REMOTAZIONE COMBUSTIBILE
ONLY WITH REMOTE EXTERNAL FUEL KIT
SCHEMA FUNZIONALE
OPERATIONAL LAYOUT
FUNKTIONSSCHEMA
SCHEMA FONCTIONNEL
Sheet : 4
BU = BLU / BLUE / BLEU / BLAU
BK = NERO / BLACK / NOIR / SCHWARZ
BN = MARRONE / BROWN / MARRON / BRAUN
YE = GIALLO / YELLOW / JAUNE / GELB
GN = VERDE / GREEN / VERT / GRÜN
RD = ROSSO / RED / ROUGE / ROT
WH = BIANCO / WHITE / BLANC / WEISS
OG= ARANCIO / ORANGE / ORANGE / ORANGE
VT= VIOLETTO / VIOLET / VIOLET / VIOLETT
GY= GRIGIO / GREY / GRIS / GRAU
PK= ROSA / PINK / ROSE / ROSA
GD= ORO / GOLD / OR / GOLD
TQ= TURCHESE / TURQUOISE / TURQUOISE / TURKISBLAU
SR= ARGENTO / SILVER / ARGENT / SILBER
GNYE= GIALLO/VERDE / YELLOW/GREEN / JAUNE/VERT / GELB/GRUN
-F1
-KM
-KG1
-KO1
-KO2
-S1
-S0G
-X2
OFF POSITION
OIL POSITION
GAS POSITION

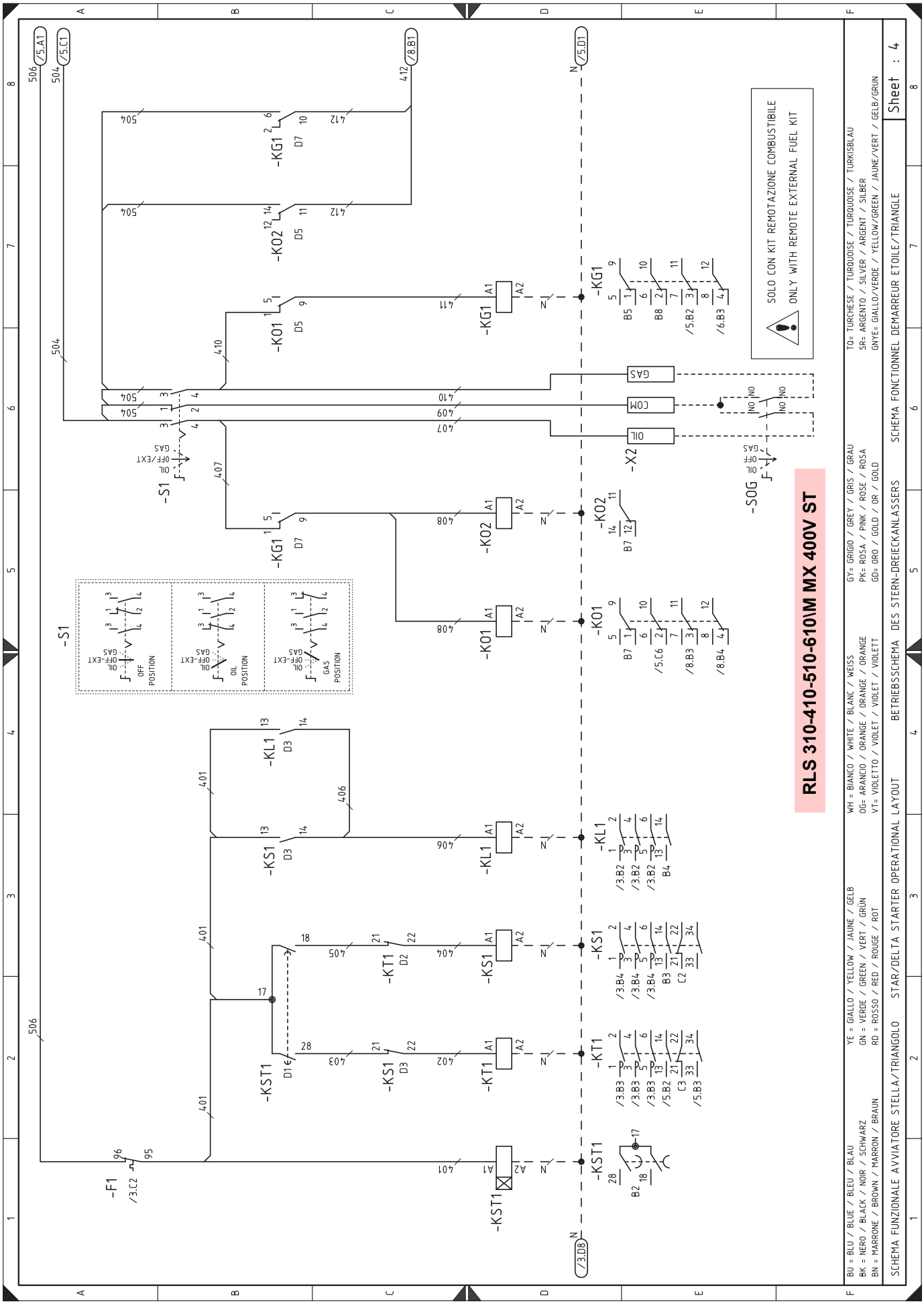
RLS 310-410-510-610\M MX 400V ST
SOLO CON KIT REMOTAZIONE COMBUSTIBILE
ONLY WITH REMOTE EXTERNAL FUEL KIT
SCHEMA FUNZIONALE AVVIATORE STELLA/TRIANGOLO STAR/DELTA STARTER OPERATIONAL LAYOUT BETRIEBSSCHEMA DES STERN-DREIECKANLASSERS SCHEMA FONCTIONNEL DEMARREUR ETOILE/TRIANGLE
Sheet : 4
BU = BLU / BLUE / BLEU / BLAU
BK = NERO / BLACK / NOIR / SCHWARZ
BN = MARRONE / BROWN / MARRON / BRAUN
YE = GIALLO / YELLOW / JAUNE / GELB
GN = VERDE / GREEN / VERT / GRÜN
RD = ROSSO / RED / ROUGE / ROT
WH = BIANCO / WHITE / BLANC / WEISS
OG= ARANCIO / ORANGE / ORANGE / ORANGE
VT= VIOLETTO / VIOLET / VIOLET / VIOLETT
GY= GRIGIO / GREY / GRIS / GRAU
PK= ROSA / PINK / ROSE / ROSA
GD= ORO / GOLD / OR / GOLD
TQ= TURCHESE / TURQUOISE / TURQUOISE / TURKISBLAU
SR= ARGENTO / SILVER / ARGENT / SILBER
GNYE= GIALLO/VERDE / YELLOW/GREEN / JAUNE/VERT / GELB/GRUN
-F1
-S1
-SOG
-X2
-KG1
-KO1
-KO2
-KL1
-KS1
-KT1
-KST1
OFF POSITION
OIL POSITION
GAS POSITION

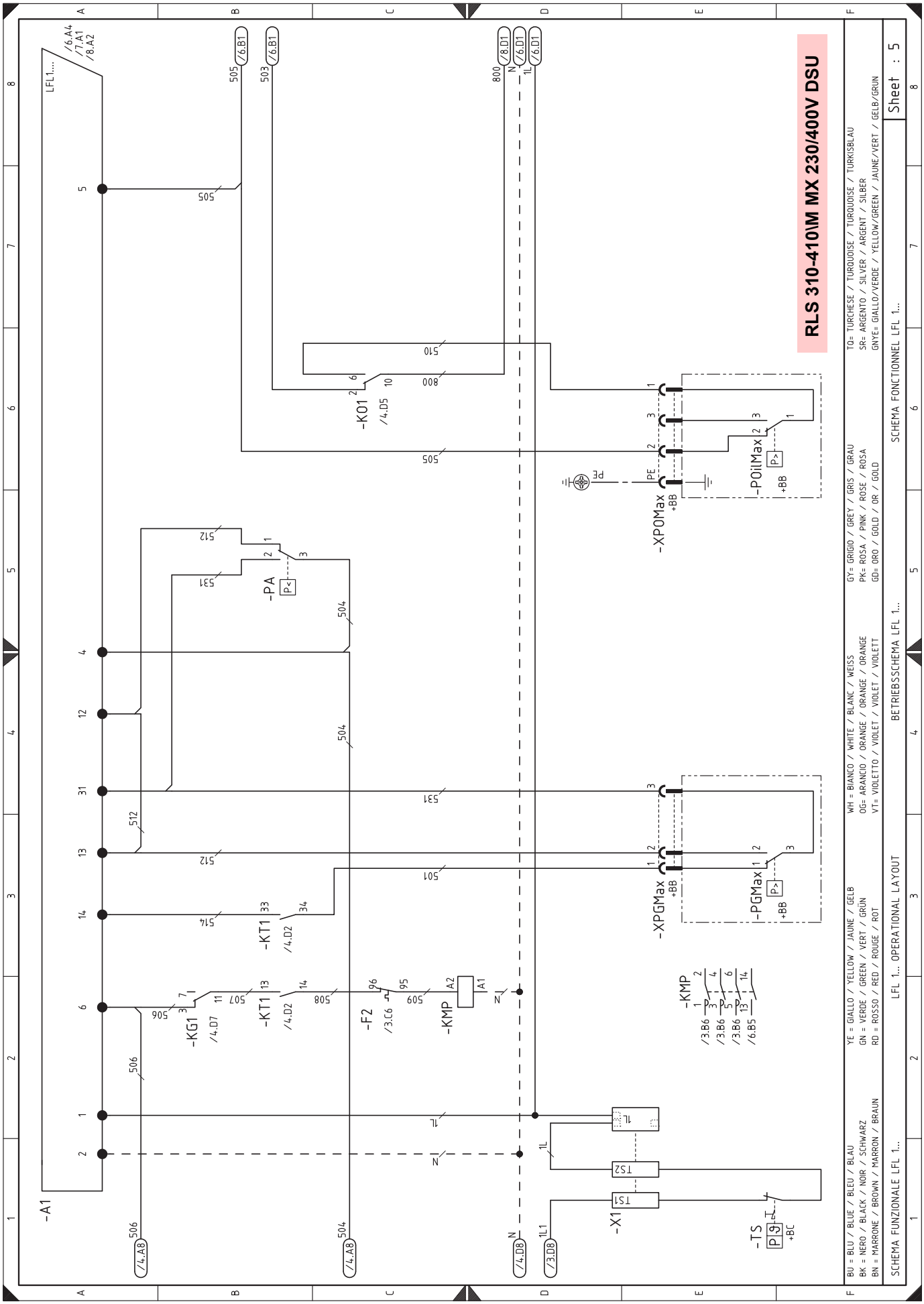
RLS 310-410\M MX 230/400V DSU
SCHEMA FUNZIONALE LFL 1...
LFL 1... OPERATIONAL LAYOUT
BETRIEBSSCHEMA LFL 1...
SCHEMA FONCTIONNEL LFL 1...
Sheet : 5
-A1
-KG1
-KT1
-F2
-KMP
-KO1
-PA
-XPOMax
-XPGMax
-POilMax
-PGMax
-X1
-TS
BU = BLU / BLUE / BLEU / BLAU
BK = NERO / BLACK / NOIR / SCHWARZ
BN = MARRONE / BROWN / MARRON / BRAUN
YE = GIALLO / YELLOW / JAUNE / GELB
GN = VERDE / GREEN / VERT / GRÜN
RD = ROSSO / RED / ROUGE / ROT
WH = BIANCO / WHITE / BLANC / WEISS
OG= ARANCIO / ORANGE / ORANGE / ORANGE
VT= VIOLETTO / VIOLET / VIOLET / VIOLETT
GY= GRIGIO / GREY / GRIS / GRAU
PK= ROSA / PINK / ROSE / ROSA
GD= ORO / GOLD / OR / GOLD
TQ= TURCHESE / TURQUOISE / TURQUOISE / TURKISBLAU
SR= ARGENTO / SILVER / ARGENT / SILBER
GNYE= GIALLO/VERDE / YELLOW/GREEN / JAUNE/VERT / GELB/GRUN

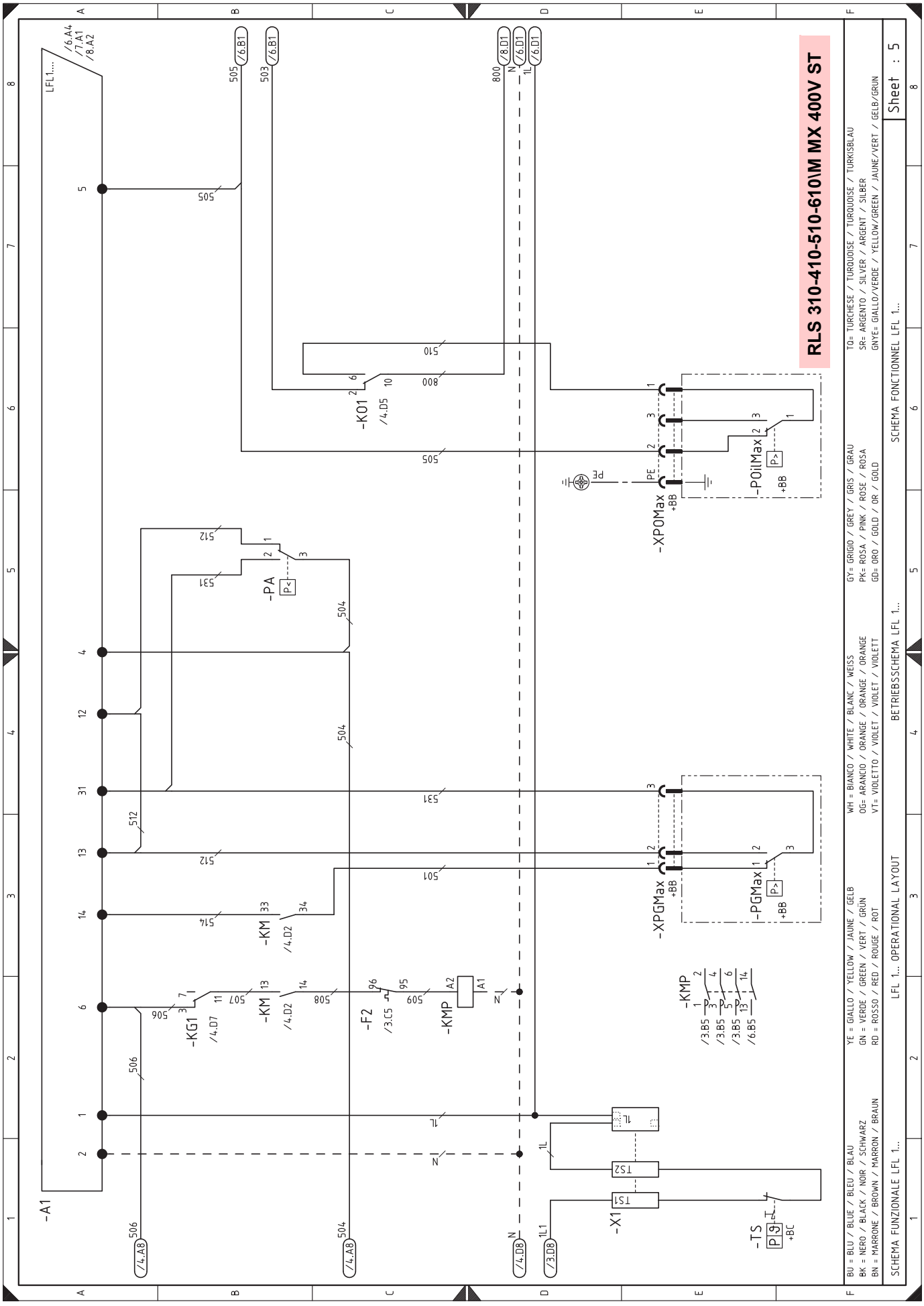
RLS 310-410-510-610\M MX 400V ST
SCHEMA FUNZIONALE LFL 1...
LFL 1... OPERATIONAL LAYOUT
BETRIEBSSCHEMA LFL 1...
SCHEMA FONCTIONNEL LFL 1...
Sheet : 5
-A1
-KG1
-KM
-KMP
-F2
-PA
-POilMax
-PGMax
-XPOMax
-XPGMax
-X1
-TS
-KO1
BU = BLU / BLUE / BLEU / BLAU
BK = NERO / BLACK / NOIR / SCHWARZ
BN = MARRONE / BROWN / MARRON / BRAUN
YE = GIALLO / YELLOW / JAUNE / GELB
GN = VERDE / GREEN / VERT / GRÜN
RD = ROSSO / RED / ROUGE / ROT
WH = BIANCO / WHITE / BLANC / WEISS
OG= ARANCIO / ORANGE / ORANGE / ORANGE
VT= VIOLETTO / VIOLET / VIOLET / VIOLETT
GY= GRIGIO / GREY / GRIS / GRAU
PK= ROSA / PINK / ROSE / ROSA
GD= ORO / GOLD / OR / GOLD
TQ= TURCHESE / TURQUOISE / TURQUOISE / TURKISBLAU
SR= ARGENTO / SILVER / ARGENT / SILBER
GNYE= GIALLO/VERDE / YELLOW/GREEN / JAUNE/VERT / GELB/GRÜN

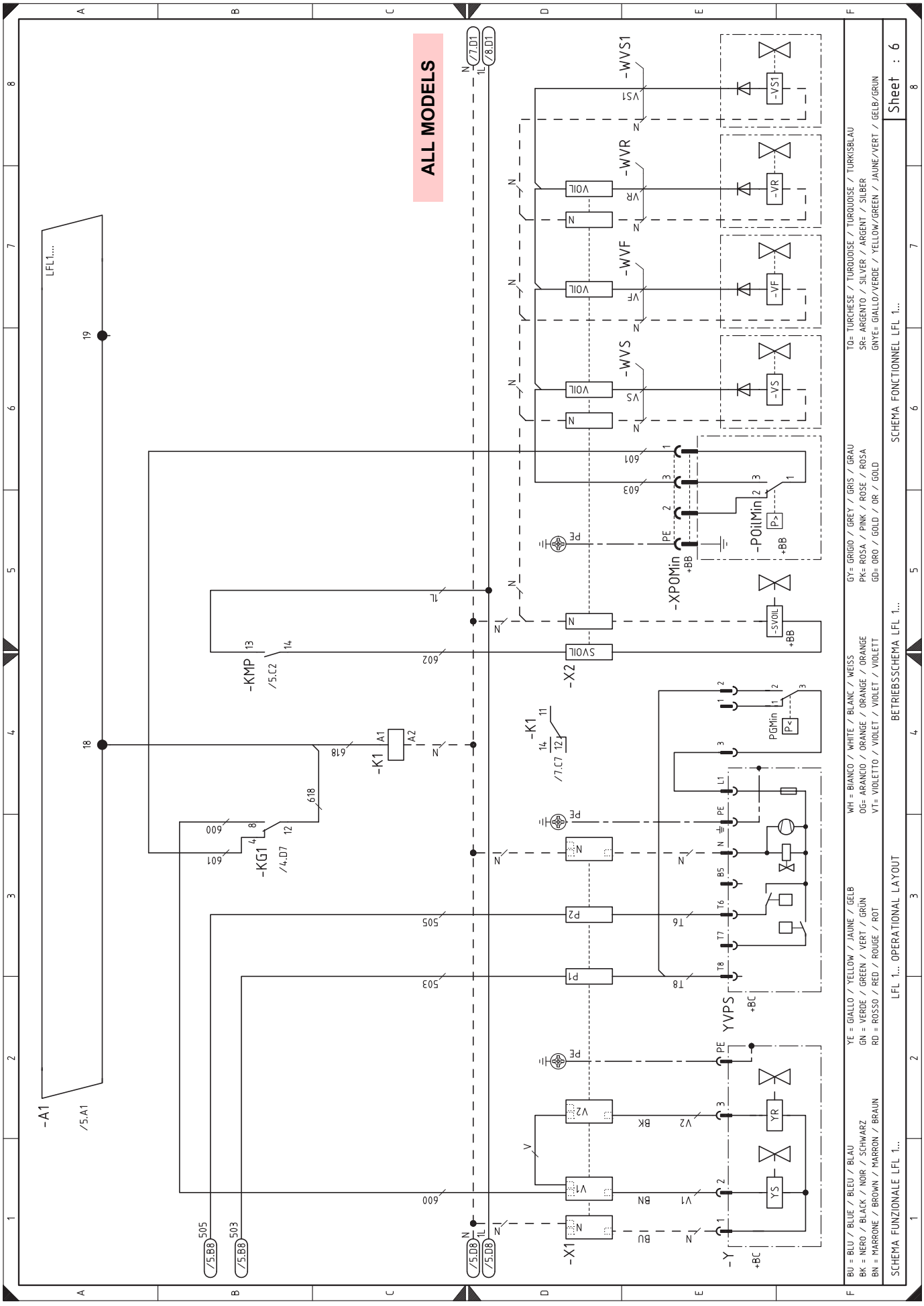
ALL MODELS
-A1
/5.A1
LFL1....
-KG1
/4.D7
-K1
/7.C7
-KMP
/5.C2
-X1
-X2
-Y
YVPS
-XPOMin
-POilMin
-WVS1
-WVR
-WVF
-WVS
-VS1
-VR
-VF
-VS
-SVOIL
PGMin
BU = BLU / BLUE / BLEU / BLAU
BK = NERO / BLACK / NOIR / SCHWARZ
BN = MARRONE / BROWN / MARRON / BRAUN
YE = GIALLO / YELLOW / JAUNE / GELB
GN = VERDE / GREEN / VERT / GRÜN
RD = ROSSO / RED / ROUGE / ROT
WH = BIANCO / WHITE / BLANC / WEISS
OG= ARANCIO / ORANGE / ORANGE / ORANGE
VT= VIOLETTO / VIOLET / VIOLET / VIOLETT
GY= GRIGIO / GREY / GRIS / GRAU
PK= ROSA / PINK / ROSE / ROSA
GD= ORO / GOLD / OR / GOLD
TQ= TURCHESE / TURQUOISE / TURQUOISE / TURKISBLAU
SR= ARGENTO / SILVER / ARGENT / SILBER
GNYE= GIALLO/VERDE / YELLOW/GREEN / JAUNE/VERT / GELB/GRUN
SCHEMA FUNZIONALE LFL 1...
LFL 1... OPERATIONAL LAYOUT
BETRIEBSSCHEMA LFL 1...
SCHEMA FONCTIONNEL LFL 1...
Sheet : 6

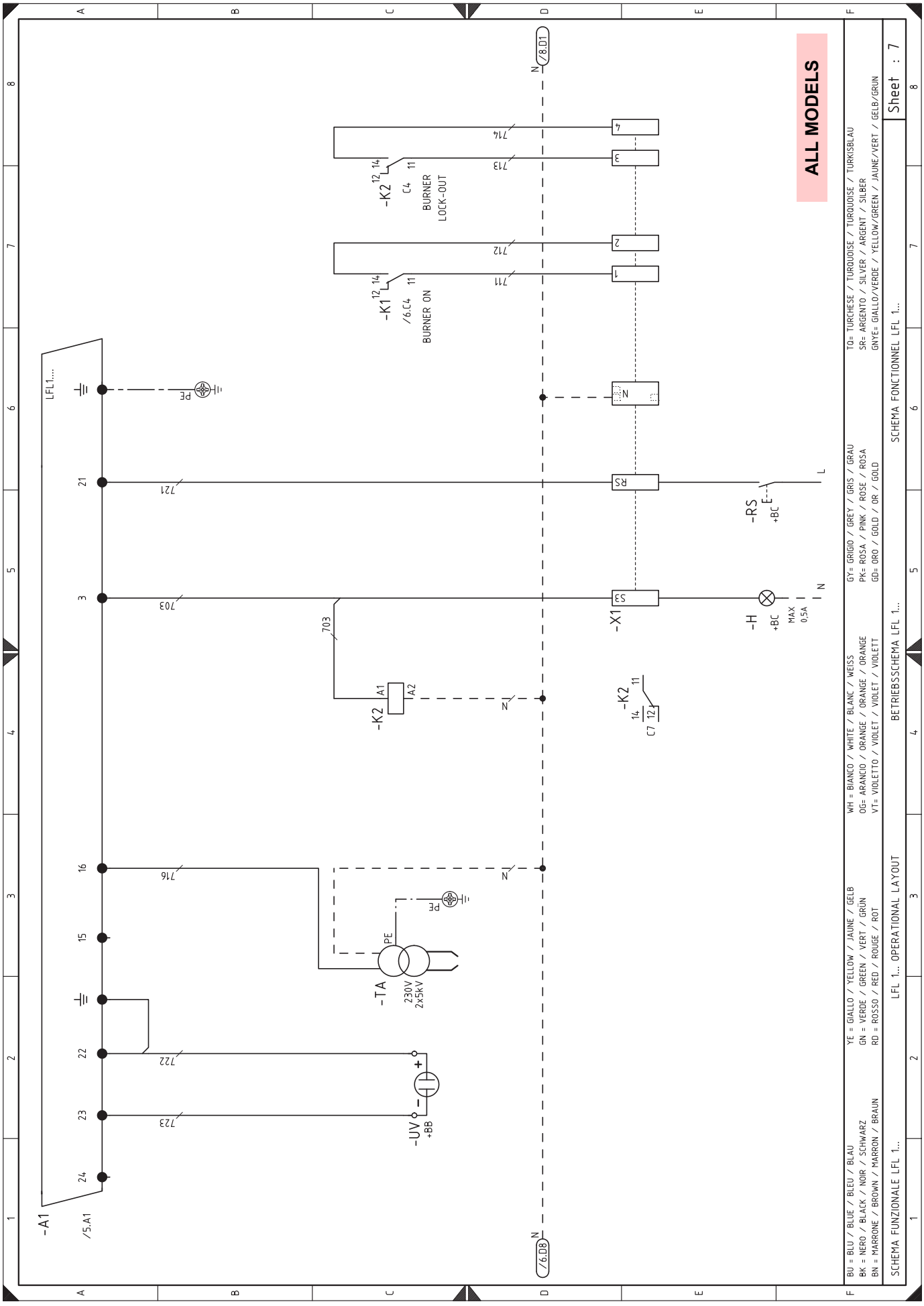
ALL MODELS
SCHEMA FUNZIONALE LFL 1...
LFL 1... OPERATIONAL LAYOUT
BETRIEBSSCHEMA LFL 1...
SCHEMA FONCTIONNEL LFL 1...
Sheet : 7
BU = BLU / BLUE / BLEU / BLAU
BK = NERO / BLACK / NOIR / SCHWARZ
BN = MARRONE / BROWN / MARRON / BRAUN
YE = GIALLO / YELLOW / JAUNE / GELB
GN = VERDE / GREEN / VERT / GRÜN
RD = ROSSO / RED / ROUGE / ROT
WH = BIANCO / WHITE / BLANC / WEISS
OG= ARANCIO / ORANGE / ORANGE / ORANGE
VT= VIOLETTO / VIOLET / VIOLET / VIOLETT
GY= GRIGIO / GREY / GRIS / GRAU
PK= ROSA / PINK / ROSE / ROSA
GD= ORO / GOLD / OR / GOLD
TQ= TURCHESE / TURQUOISE / TURQUOISE / TURKISBLAU
SR= ARGENTO / SILVER / ARGENT / SILBER
GNYE= GIALLO/VERDE / YELLOW/GREEN / JAUNE/VERT / GELB/GRÜN
-A1
/5.A1
LFL1....
-K1
/6.C4
BURNER ON
-K2
C4
BURNER
LOCK-OUT
-K2
C7
-X1
-RS
+BC
-H
+BC
MAX
0,5A
-TA
230V
2x5kV
-UV
+BB
PE
N
L
/8.D1
/6.D8

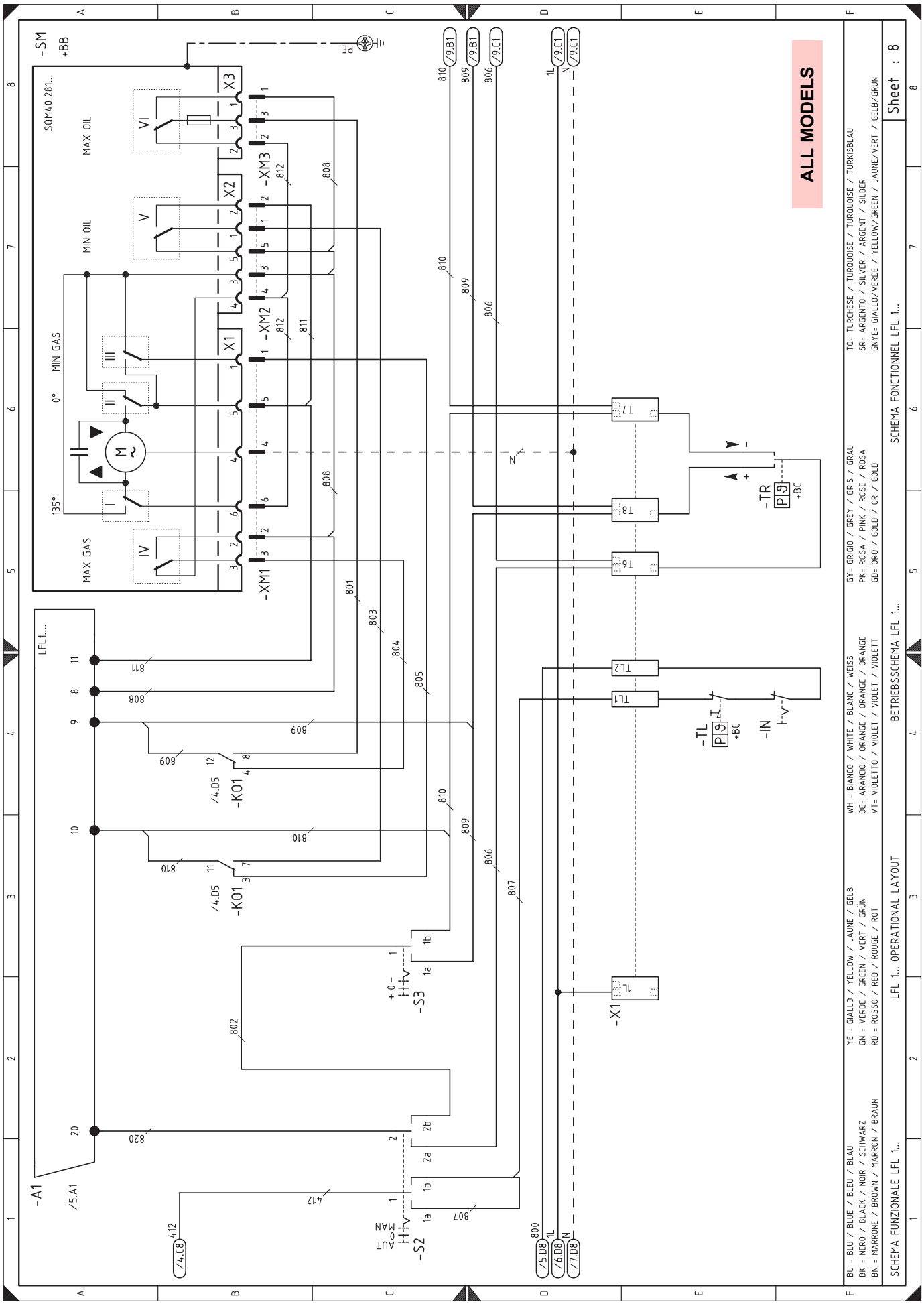
ALL MODELS
SCHEMA FUNZIONALE LFL 1...
LFL 1... OPERATIONAL LAYOUT
BETRIEBSSCHEMA LFL 1...
SCHEMA FONCTIONNEL LFL 1...
Sheet : 8
BU = BLU / BLUE / BLEU / BLAU
BK = NERO / BLACK / NOIR / SCHWARZ
BN = MARRONE / BROWN / MARRON / BRAUN
YE = GIALLO / YELLOW / JAUNE / GELB
GN = VERDE / GREEN / VERT / GRÜN
RD = ROSSO / RED / ROUGE / ROT
WH = BIANCO / WHITE / BLANC / WEISS
OG= ARANCIO / ORANGE / ORANGE / ORANGE
VT= VIOLETTO / VIOLET / VIOLET / VIOLETT
GY= GRIGIO / GREY / GRIS / GRAU
PK= ROSA / PINK / ROSE / ROSA
GD= ORO / GOLD / OR / GOLD
TQ= TURCHESE / TURQUOISE / TURQUOISE / TURKISBLAU
SR= ARGENTO / SILVER / ARGENT / SILBER
GNYE= GIALLO/VERDE / YELLOW/GREEN / JAUNE/VERT / GELB/GRUN
-SM
+BB
SQM40.281...
MAX OIL
MIN OIL
MIN GAS
MAX GAS
-XM1
-XM2
-XM3
-A1
LFL1...
-K01
-S2
-S3
-X1
-TL
-IN
-TR
+BC

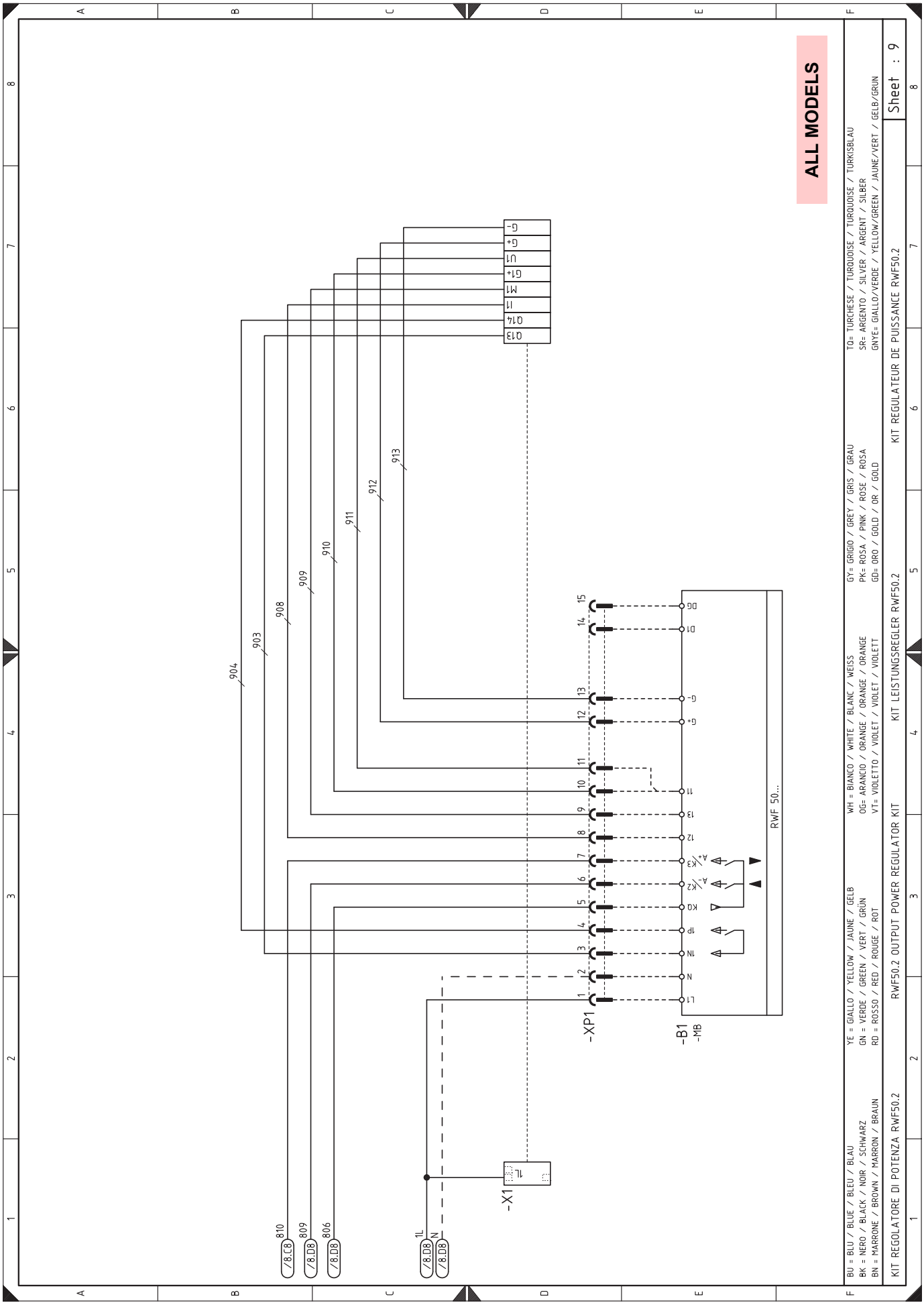
ALL MODELS
KIT REGOLATORE DI POTENZA RWF50.2
RWF50.2 OUTPUT POWER REGULATOR KIT
KIT LEISTUNGSREGLER RWF50.2
KIT REGULATEUR DE PUISSANCE RWF50.2
Sheet : 9
BU = BLU / BLUE / BLEU / BLAU
BK = NERO / BLACK / NOIR / SCHWARZ
BN = MARRONE / BROWN / MARRON / BRAUN
YE = GIALLO / YELLOW / JAUNE / GELB
GN = VERDE / GREEN / VERT / GRÜN
RD = ROSSO / RED / ROUGE / ROT
WH = BIANCO / WHITE / BLANC / WEISS
OG= ARANCIO / ORANGE / ORANGE / ORANGE
VT= VIOLETTO / VIOLET / VIOLET / VIOLETT
GY= GRIGIO / GREY / GRIS / GRAU
PK= ROSA / PINK / ROSE / ROSA
GD= ORO / GOLD / OR / GOLD
TQ= TURCHESE / TURQUOISE / TURQUOISE / TURKISBLAU
SR= ARGENTO / SILVER / ARGENT / SILBER
GNYE= GIALLO/VERDE / YELLOW/GREEN / JAUNE/VERT / GELB/GRÜN
RWF 50...
-XP1
-B1
-MB
-X1
/8.C8
/8.D8
810
809
806
1L
N
903
904
908
909
910
911
912
913

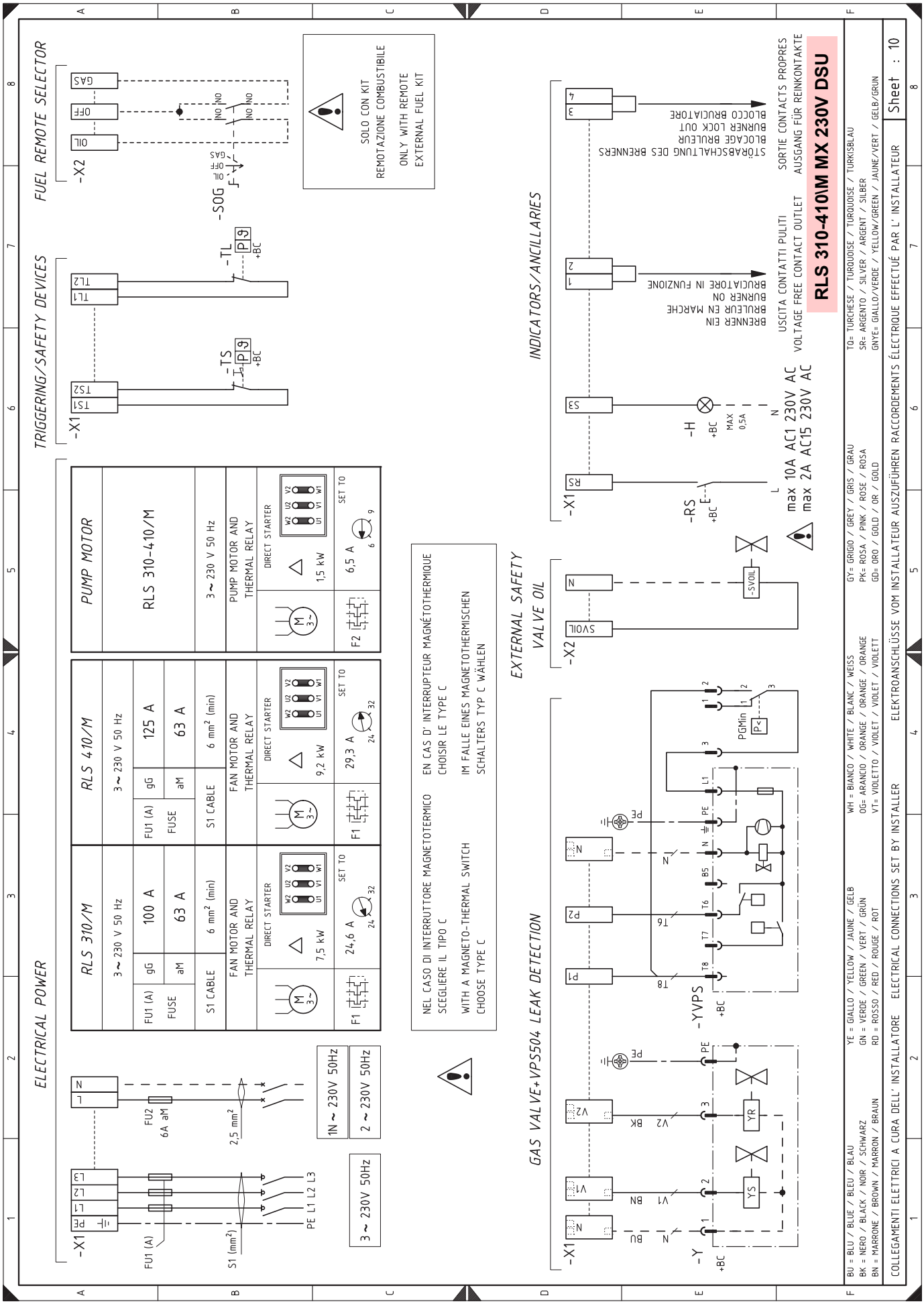
ELECTRICAL POWER
TRIGGERING/SAFETY DEVICES
FUEL REMOTE SELECTOR
PUMP MOTOR
RLS 310-410/M
3 ~ 230 V 50 Hz
PUMP MOTOR AND THERMAL RELAY
DIRECT STARTER
1,5 kW
6,5 A
SET TO
RLS 310/M
RLS 410/M
FU1 (A)
FUSE
gG
aM
100 A
63 A
125 A
63 A
S1 CABLE
6 mm² (min)
FAN MOTOR AND THERMAL RELAY
7,5 kW
9,2 kW
24,6 A
29,3 A
F1
F2
-X1
-X2
-TS
-TL
-SOG
-H
-RS
-SVOIL
-YVPS
-Y
SOLO CON KIT
REMOTAZIONE COMBUSTIBILE
ONLY WITH REMOTE
EXTERNAL FUEL KIT
NEL CASO DI INTERRUTTORE MAGNETOTERMICO
SCEGLIERE IL TIPO C
WITH A MAGNETO-THERMAL SWITCH
CHOOSE TYPE C
EN CAS D' INTERRUPTEUR MAGNÉTOTHERMIQUE
CHOISIR LE TYPE C
IM FALLE EINES MAGNETOTHERMISCHEN
SCHALTERS TYP C WÄHLEN
EXTERNAL SAFETY VALVE OIL
INDICATORS/ANCILLARIES
GAS VALVE+VPS504 LEAK DETECTION
BRENNER EIN
BRULEUR EN MARCHE
BURNER ON
BRUCIATORE IN FUNZIONE
USCITA CONTATTI PULITI
VOLTAGE FREE CONTACT OUTLET
SORTIE CONTACTS PROPRES
AUSGANG FÜR REINKONTAKTE
STÖRABSCHALTUNG DES BRENNERS
BLOCAGE BRULEUR
BURNER LOCK OUT
BLOCCO BRUCIATORE
max 10A AC1 230V AC
max 2A AC15 230V AC
RLS 310-410\M MX 230V DSU
1N ~ 230V 50Hz
2 ~ 230V 50Hz
3 ~ 230V 50Hz
FU2 6A aM
2,5 mm²
S1 (mm²)
PE L1 L2 L3
BU = BLU / BLUE / BLEU / BLAU
BK = NERO / BLACK / NOIR / SCHWARZ
BN = MARRONE / BROWN / MARRON / BRAUN
YE = GIALLO / YELLOW / JAUNE / GELB
GN = VERDE / GREEN / VERT / GRÜN
RD = ROSSO / RED / ROUGE / ROT
WH = BIANCO / WHITE / BLANC / WEISS
OG= ARANCIO / ORANGE / ORANGE / ORANGE
VI= VIOLETTO / VIOLET / VIOLET / VIOLETT
GY= GRIGIO / GREY / GRIS / GRAU
PK= ROSA / PINK / ROSE / ROSA
GD= ORO / GOLD / OR / GOLD
TQ= TURCHESE / TURQUOISE / TURQUOISE / TÜRKISBLAU
SR= ARGENTO / SILVER / ARGENT / SILBER
GNYE= GIALLO/VERDE / YELLOW/GREEN / JAUNE/VERT / GELB/GRÜN
COLLEGAMENTI ELETTRICI A CURA DELL' INSTALLATORE
ELECTRICAL CONNECTIONS SET BY INSTALLER
ELEKTROANSCHLÜSSE VOM INSTALLATEUR AUSZUFÜHREN
RACCORDEMENTS ÉLECTRIQUE EFFECTUÉ PAR L' INSTALLATEUR
Sheet : 10

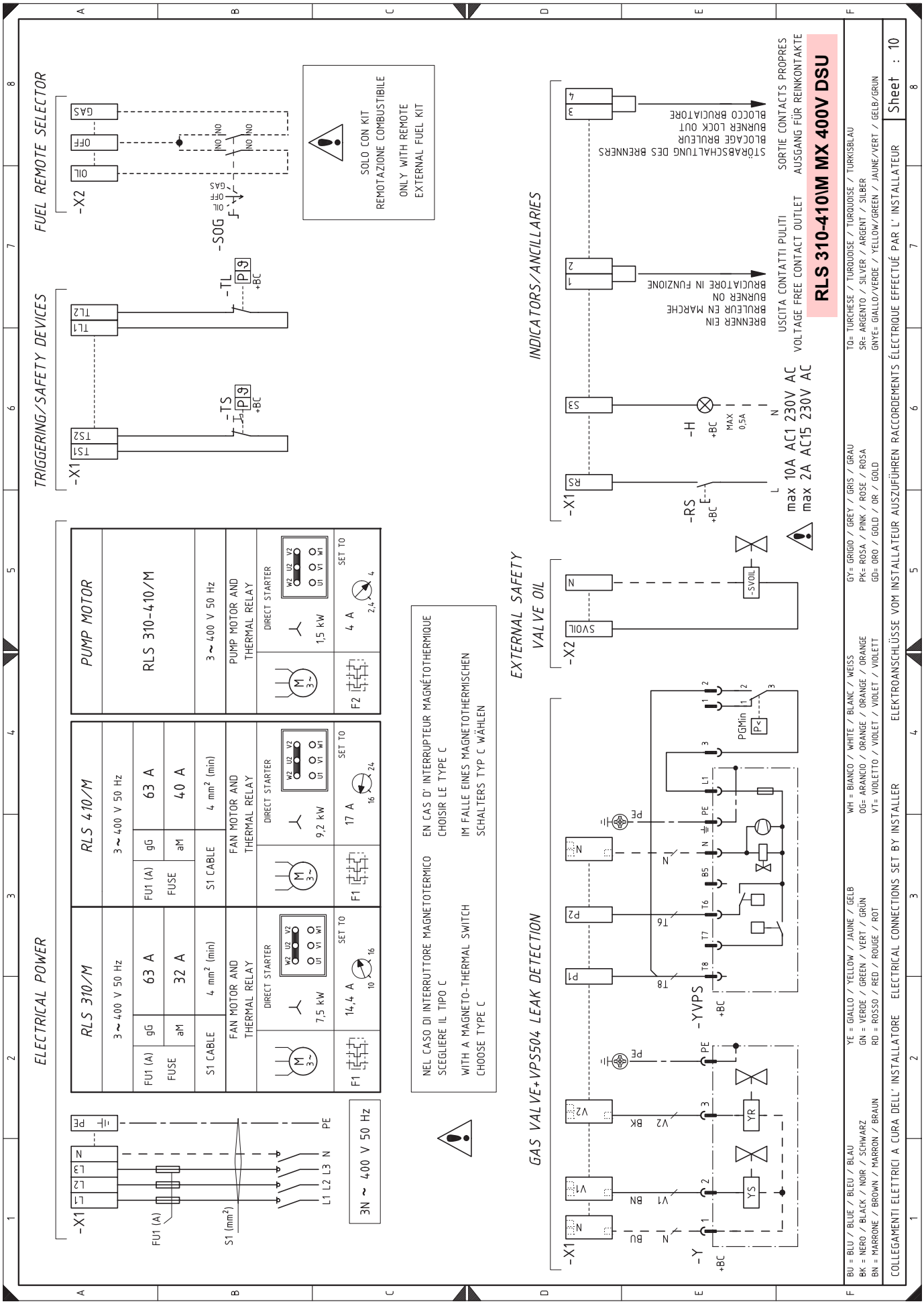
ELECTRICAL POWER
TRIGGERING/SAFETY DEVICES
FUEL REMOTE SELECTOR
INDICATORS/ANCILLARIES
EXTERNAL SAFETY VALVE OIL
GAS VALVE+VPS504 LEAK DETECTION
RLS 310-410\M MX 400V DSU
PUMP MOTOR
RLS 310-410/M
3 ~ 400 V 50 Hz
S1 CABLE
4 mm² (min)
FUSE
FU1 (A)
gG
aM
63 A
40 A
32 A
FAN MOTOR AND THERMAL RELAY
DIRECT STARTER
SET TO
7,5 kW
9,2 kW
1,5 kW
14,4 A
17 A
4 A
F1
F2
3N ~ 400 V 50 Hz
SOLO CON KIT
REMOTAZIONE COMBUSTIBILE
ONLY WITH REMOTE
EXTERNAL FUEL KIT
NEL CASO DI INTERRUTTORE MAGNETOTERMICO
SCEGLIERE IL TIPO C
WITH A MAGNETO-THERMAL SWITCH
CHOOSE TYPE C
EN CAS D' INTERRUPTEUR MAGNÉTOTHERMIQUE
CHOISIR LE TYPE C
IM FALLE EINES MAGNETOTHERMISCHEN
SCHALTERS TYP C WÄHLEN
BRENNER EIN
BRULEUR EN MARCHE
BURNER ON
BRUCIATORE IN FUNZIONE
STÖRABSCHALTUNG DES BRENNERS
BLOCAGE BRULEUR
BURNER LOCK OUT
BLOCCO BRUCIATORE
USCITA CONTATTI PULITI
VOLTAGE FREE CONTACT OUTLET
SORTIE CONTACTS PROPRES
AUSGANG FÜR REINKONTAKTE
max 10A AC1 230V AC
max 2A AC15 230V AC
BU = BLU / BLUE / BLEU / BLAU
BK = NERO / BLACK / NOIR / SCHWARZ
BN = MARRONE / BROWN / MARRON / BRAUN
YE = GIALLO / YELLOW / JAUNE / GELB
GN = VERDE / GREEN / VERT / GRÜN
RD = ROSSO / RED / ROUGE / ROT
WH = BIANCO / WHITE / BLANC / WEISS
OG = ARANCIO / ORANGE / ORANGE / ORANGE
VT = VIOLETTO / VIOLET / VIOLET / VIOLETT
GY = GRIGIO / GREY / GRIS / GRAU
PK = ROSA / PINK / ROSE / ROSA
GD = ORO / GOLD / OR / GOLD
TQ = TURCHESE / TURQUOISE / TURQUOISE / TÜRKISBLAU
SR = ARGENTO / SILVER / ARGENT / SILBER
GNYE = GIALLO/VERDE / YELLOW/GREEN / JAUNE/VERT / GELB/GRÜN
COLLEGAMENTI ELETTRICI A CURA DELL' INSTALLATORE
ELECTRICAL CONNECTIONS SET BY INSTALLER
ELEKTROANSCHLÜSSE VOM INSTALLATEUR AUSZUFÜHREN
RACCORDEMENTS ÉLECTRIQUE EFFECTUÉ PAR L' INSTALLATEUR
Sheet : 10

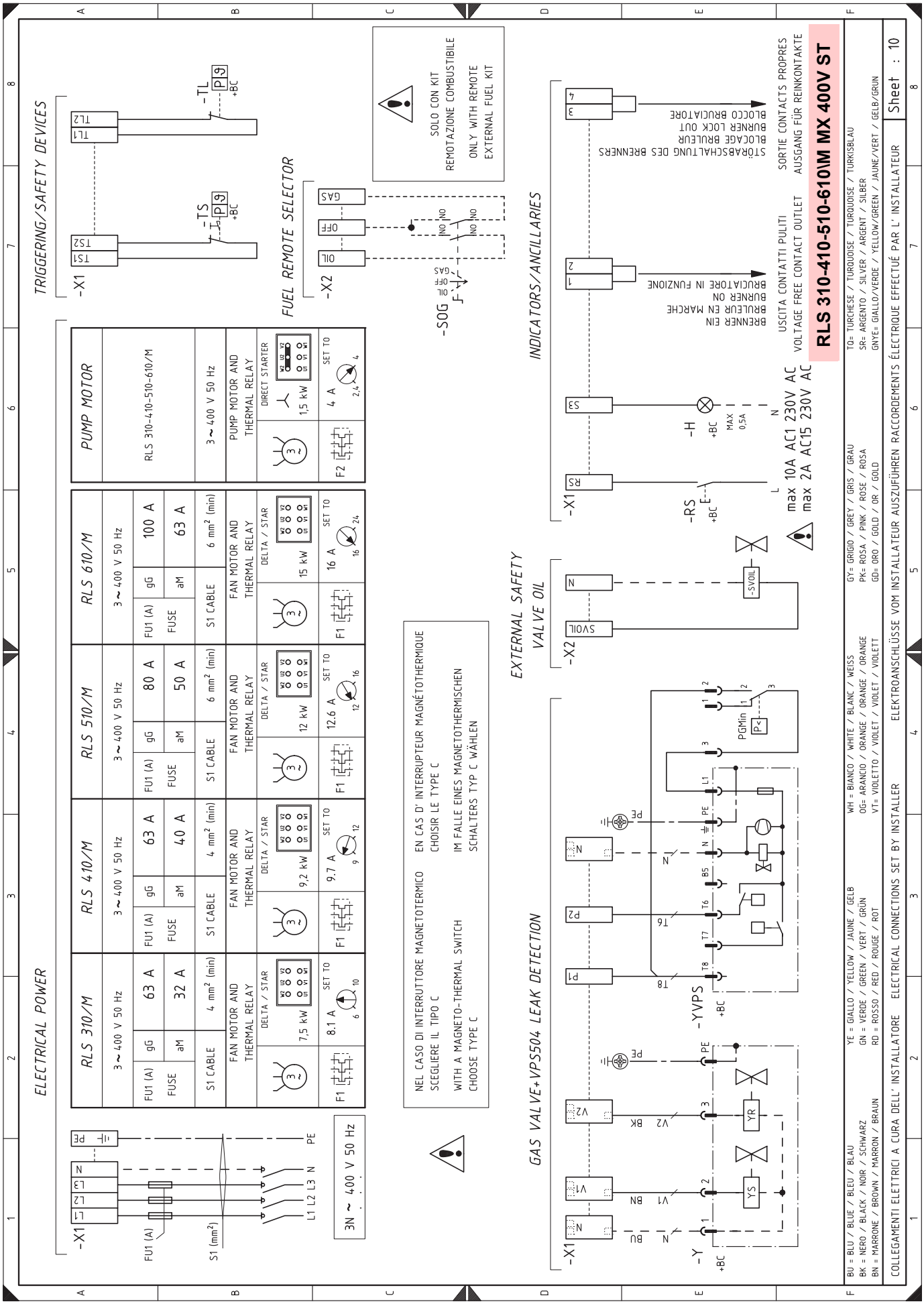
ELECTRICAL POWER
TRIGGERING/SAFETY DEVICES
FUEL REMOTE SELECTOR
INDICATORS/ANCILLARIES
EXTERNAL SAFETY VALVE OIL
GAS VALVE+VPS504 LEAK DETECTION
RLS 310-410-510-610M MX 400V ST
RLS 310/M
RLS 410/M
RLS 510/M
RLS 610/M
PUMP MOTOR
RLS 310-410-510-610/M
3 ~ 400 V 50 Hz
FAN MOTOR AND THERMAL RELAY
PUMP MOTOR AND THERMAL RELAY
DELTA / STAR
DIRECT STARTER
S1 CABLE
FUSE
SOLO CON KIT
REMOTAZIONE COMBUSTIBILE
ONLY WITH REMOTE
EXTERNAL FUEL KIT
NEL CASO DI INTERRUTTORE MAGNETOTERMICO
SCEGLIERE IL TIPO C
WITH A MAGNETO-THERMAL SWITCH
CHOOSE TYPE C
EN CAS D' INTERRUPTEUR MAGNÉTOTHERMIQUE
CHOISIR LE TYPE C
IM FALLE EINES MAGNETOTHERMISCHEN
SCHALTERS TYP C WÄHLEN
BRENNER EIN
BRULEUR EN MARCHE
BURNER ON
BRUCIATORE IN FUNZIONE
USCITA CONTATTI PULITI
VOLTAGE FREE CONTACT OUTLET
SORTIE CONTACTS PROPRES
AUSGANG FÜR REINKONTAKTE
STÖRABSCHALTUNG DES BRENNERS
BLOCAGE BRULEUR
BURNER LOCK OUT
BLOCCO BRUCIATORE
max 10A AC1 230V AC
max 2A AC15 230V AC
BU = BLU / BLUE / BLEU / BLAU
BK = NERO / BLACK / NOIR / SCHWARZ
BN = MARRONE / BROWN / MARRON / BRAUN
YE = GIALLO / YELLOW / JAUNE / GELB
GN = VERDE / GREEN / VERT / GRÜN
RD = ROSSO / RED / ROUGE / ROT
WH = BIANCO / WHITE / BLANC / WEISS
OG= ARANCIO / ORANGE / ORANGE / ORANGE
VI= VIOLETTO / VIOLET / VIOLET / VIOLETT
GY= GRIGIO / GREY / GRIS / GRAU
PK= ROSA / PINK / ROSE / ROSA
GD= ORO / GOLD / OR / GOLD
TQ= TURCHESE / TURQUOISE / TURQUOISE / TÜRKISBLAU
SR= ARGENTO / SILVER / ARGENT / SILBER
GNYE= GIALLO/VERDE / YELLOW/GREEN / JAUNE/VERT / GELB/GRÜN
COLLEGAMENTI ELETTRICI A CURA DELL' INSTALLATORE
ELECTRICAL CONNECTIONS SET BY INSTALLER
ELEKTROANSCHLÜSSE VOM INSTALLATEUR AUSZUFÜHREN
RACCORDEMENTS ÉLECTRIQUE EFFECTUÉ PAR L' INSTALLATEUR
Sheet : 10

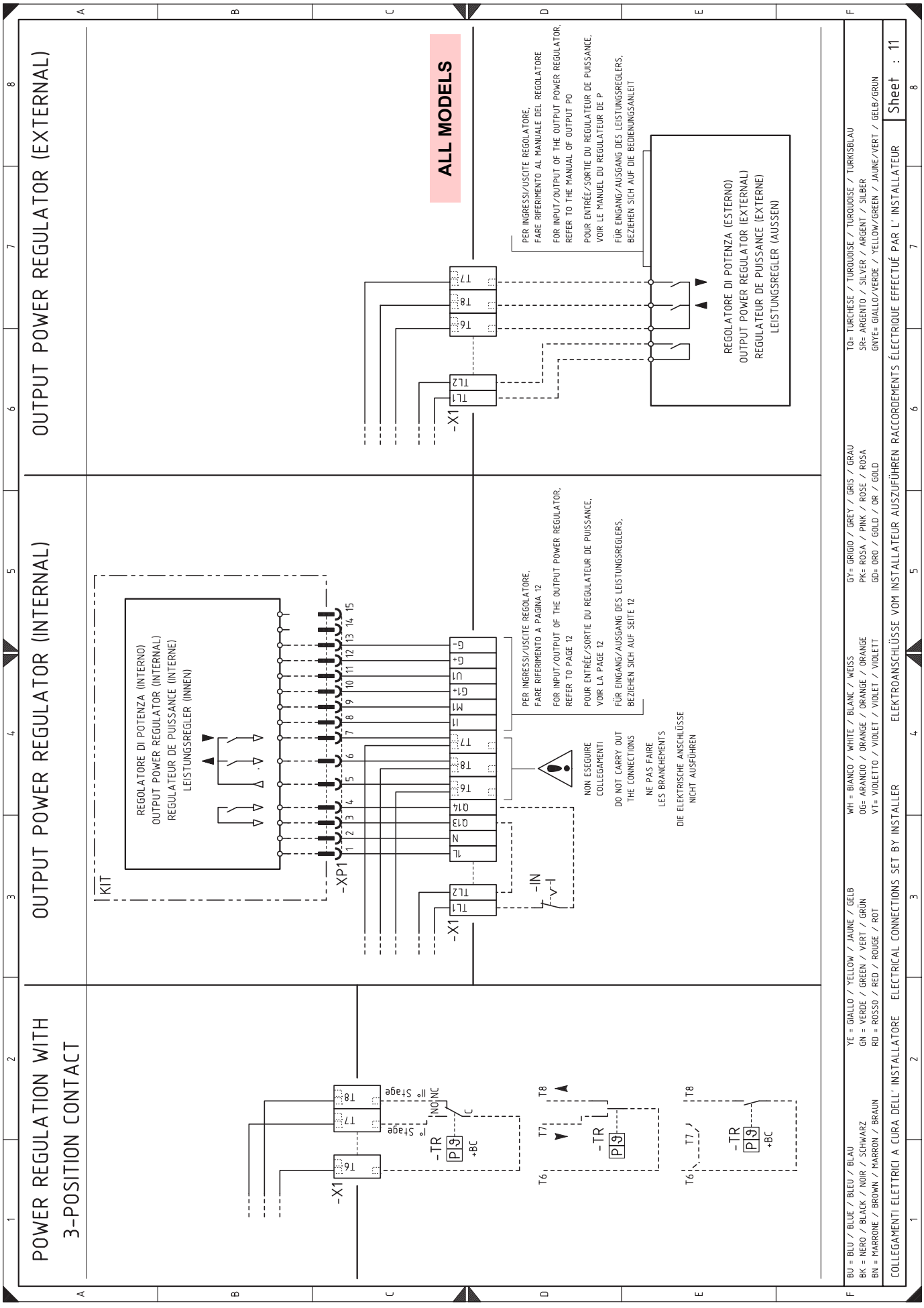
POWER REGULATION WITH
3-POSITION CONTACT
OUTPUT POWER REGULATOR (INTERNAL)
OUTPUT POWER REGULATOR (EXTERNAL)
ALL MODELS
KIT
REGOLATORE DI POTENZA (INTERNO)
OUTPUT POWER REGULATOR (INTERNAL)
REGULATEUR DE PUISSANCE (INTERNE)
LEISTUNGSREGLER (INNEN)
-XP1
-X1
-IN
PER INGRESSI/USCITE REGOLATORE,
FARE RIFERIMENTO A PAGINA 12
FOR INPUT/OUTPUT OF THE OUTPUT POWER REGULATOR,
REFER TO PAGE 12
POUR ENTRÉE/SORTIE DU REGULATEUR DE PUISSANCE,
VOIR LA PAGE 12
FÜR EINGANG/AUSGANG DES LEISTUNGSREGLERS,
BEZIEHEN SICH AUF SEITE 12
NON ESEGUIRE
COLLEGAMENTI
DO NOT CARRY OUT
THE CONNECTIONS
NE PAS FAIRE
LES BRANCHEMENTS
DIE ELEKTRISCHE ANSCHLÜSSE
NICHT AUSFÜHREN
REGOLATORE DI POTENZA (ESTERNO)
OUTPUT POWER REGULATOR (EXTERNAL)
REGULATEUR DE PUISSANCE (EXTERNE)
LEISTUNGSREGLER (AUSSEN)
-TR
BU = BLU / BLUE / BLEU / BLAU
BK = NERO / BLACK / NOIR / SCHWARZ
BN = MARRONE / BROWN / MARRON / BRAUN
YE = GIALLO / YELLOW / JAUNE / GELB
GN = VERDE / GREEN / VERT / GRÜN
RD = ROSSO / RED / ROUGE / ROT
WH = BIANCO / WHITE / BLANC / WEISS
OG= ARANCIO / ORANGE / ORANGE / ORANGE
VT= VIOLETTO / VIOLET / VIOLET / VIOLETT
GY= GRIGIO / GREY / GRIS / GRAU
PK= ROSA / PINK / ROSE / ROSA
GD= ORO / GOLD / OR / GOLD
TQ= TURCHESE / TURQUOISE / TURQUOISE / TÜRKISBLAU
SR= ARGENTO / SILVER / ARGENT / SILBER
GNYE= GIALLO/VERDE / YELLOW/GREEN / JAUNE/VERT / GELB/GRUN
COLLEGAMENTI ELETTRICI A CURA DELL' INSTALLATORE
ELECTRICAL CONNECTIONS SET BY INSTALLER
ELEKTROANSCHLÜSSE VOM INSTALLATEUR AUSZUFÜHREN
RACCORDEMENTS ÉLECTRIQUE EFFECTUÉ PAR L' INSTALLATEUR
Sheet : 11

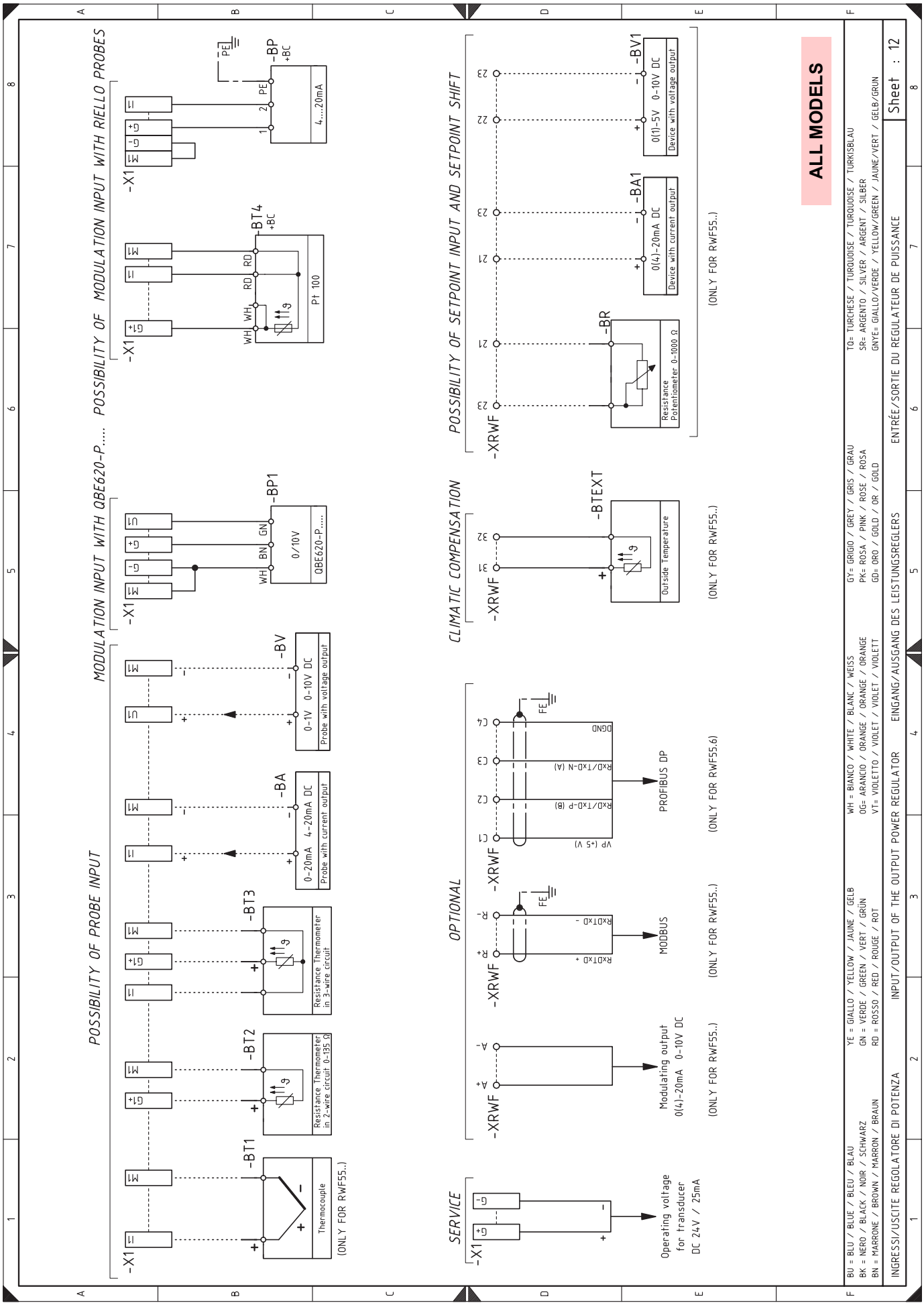
POSSIBILITY OF PROBE INPUT
MODULATION INPUT WITH QBE620-P.....
POSSIBILITY OF MODULATION INPUT WITH RIELLO PROBES
SERVICE
OPTIONAL
CLIMATIC COMPENSATION
POSSIBILITY OF SETPOINT INPUT AND SETPOINT SHIFT
-X1
-BT1
Thermocouple
(ONLY FOR RWF55..)
-BT2
Resistance Thermometer in 2-wire circuit 0-135 Ω
-BT3
Resistance Thermometer in 3-wire circuit
-BA
0-20mA 4-20mA DC
Probe with current output
-BV
0-1V 0-10V DC
Probe with voltage output
-BP1
0/10V
QBE620-P.....
-BT4
Pt 100
-BP
4....20mA
-XRWF
Operating voltage for transducer DC 24V / 25mA
Modulating output 0(4)-20mA 0-10V DC
(ONLY FOR RWF55..)
MODBUS
PROFIBUS DP
(ONLY FOR RWF55.6)
-BTEXT
Outside Temperature
-BR
Resistance Potentiometer 0-1000 Ω
-BA1
0(4)-20mA DC
Device with current output
-BV1
0(1)-5V 0-10V DC
Device with voltage output
ALL MODELS
BU = BLU / BLUE / BLEU / BLAU
BK = NERO / BLACK / NOIR / SCHWARZ
BN = MARRONE / BROWN / MARRON / BRAUN
YE = GIALLO / YELLOW / JAUNE / GELB
GN = VERDE / GREEN / VERT / GRÜN
RD = ROSSO / RED / ROUGE / ROT
WH = BIANCO / WHITE / BLANC / WEISS
OG= ARANCIO / ORANGE / ORANGE / ORANGE
VT= VIOLETTO / VIOLET / VIOLET / VIOLETT
GY= GRIGIO / GREY / GRIS / GRAU
PK= ROSA / PINK / ROSE / ROSA
GD= ORO / GOLD / OR / GOLD
TQ= TURCHESE / TURQUOISE / TURQUOISE / TURKISBLAU
SR= ARGENTO / SILVER / ARGENT / SILBER
GNYE= GIALLO/VERDE / YELLOW/GREEN / JAUNE/VERT / GELB/GRUN
INGRESSI/USCITE REGOLATORE DI POTENZA
INPUT/OUTPUT OF THE OUTPUT POWER REGULATOR
EINGANG/AUSGANG DES LEISTUNGSREGLERS
ENTRÉE/SORTIE DU REGULATEUR DE PUISSANCE
Sheet : 12

Wiring layout key

A1	Electrical control box
B1	Output power regulator RWF... internal
BA	Input in current DC 0...20 mA, 4...20 mA
BA1	Input in current DC 0...20 mA, 4...20 mA to modify remote setpoint
BP	Pressure probe
BP1	Pressure probe
BR	Remote setpoint potentiometer
BT1	Thermocouple probe
BT2	Probe Pt100, 2 wires
BT3	Probe Pt100, 3 wires
BT4	Probe Pt100, 3 wires
BTEXT	External probe for climatic compensation of the setpoint
BV	Input in voltage DC 0...1 V, 0...10 V
BV1	Input in voltage DC 0...1 V, 0...10 V to modify remote setpoint
F1	Fan motor thermal relay
F2	Pump motor thermal relay
FU	Auxiliary circuits safety fuse
H	Burner working lighting signal output
IN	Burner manual stop electric switch
KL1	Star/triangle starter line contactor
KM	Direct start up contactor
KMP	Pump motor contact maker
KT1	Star/triangle starter triangle contactor
KS1	Start/triangle starter star contactor
KST1	Star/triangle starter timer
K01	Oil enable relay
K02	Oil enable relay
K1	Clean contacts output relay burner operating
K2	Clean contacts output relay burner lockout
MV	Fan motor
PA	Air pressure switch
PE	Burner earth
PGMin	Minimum gas pressure switch
PGMax	Maximum gas pressure switch
POILMax	Maximum oil pressure switch
POILMin	Minimum oil pressure switch
RS	Remote reset switch
S1	Fuel selector
S2	Off / automatic / manual selector
S3	Power increase / power reduction selector
SM	Servomotor
SOG	Optional light oil/gas selector
VSOIL	Oil safety valve
TA	Ignition transformer
TL	Limit thermostat/pressure switch
TR	Adjustment thermostat/pressure switch
TS	Safety thermostat/pressure switch
VF-VR	Oil circuit valves
VS-VS1	Oil circuit valves
Y	Gas adjustment valve + gas safety valve
YVPS	Valve leak detection device
X1	Main terminal supply board
X2	Valve group terminal board
XM1	Servomotor connector 1
XM2	Servomotor connector 2
XM3	Servomotor connector 3
XP1	Connector for RWF output power regulator kit ... or signal converter
XPGMax	Maximum gas pressure switch connector
XPOMax	Maximum oil pressure switch connector
XPOMin	Minimum oil pressure switch connector
XRWF	Terminal board for output power regulator RWF ...
UV	UV Photocell

If there is a problem with the fuse **FU**, there is a spare one in the fuse holder.

RIELLO S.p.A.
I-37045 Legnago (VR)
Tel.: +39.0442.630111
http:// www.riello.it
http:// www.riello.com

Subject to modifications